U.S. DEPARTMENT OF COMMERCE
National Technical Information Service

PB-262 816

RESEARCH NEEDS FOR AUTOMATION OF WASTEWATER TREATMENT SYSTEMS

PROCEEDINGS OF A WORKSHOP HELD AT
CLEMSON, SOUTH CAROLINA ON
SEPTEMBER 23-25, 1974

CLEMSON UNIVERSITY, SOUTH CAROLINA

PREPARED FOR
MUNICIPAL ENVIRONMENTAL RESEARCH LABORATORY
CINCINNATI, OHIO

JANUARY 1977

UNITED STATES DEPARTMENT OF COMMERCE
National Technical Information Service
5285 Port Royal Road
Springfield, Virginia 22161

Loan

~~LAST COPY TRANSMITTAL~~

Please attach a copy of this transmittal letter* when you are submitting your last library copy to the National Technical Information Service for accessioning. A full-size reproduction will be sent to you free of charge.

-O-

I am submitting our ~~last~~ Original copy to facilitate the best possible reproduction for the public.

Name _____ Position _____

Please mail ~~free reproduction~~ Original to: Date _____

Mrs. Cynthia Holley

U.S. Environmental Protection Agency

Cincinnati, OH 45268

NTIS PROCESSING RECORD

Date Received 3/7/77

Accession# PB262816

Date due INPUT 3/7/77

	DATE	INITIAL WHEN COMPLETED
MICROFICHED		
COPIED (IF NOT PRINTED)		
REPRODUCTION RETURNED TO INPUT		
REPRODUCTION MAILED TO CONTRIBUTOR		

*Additional copies may be obtained from Input Branch, NTIS, 5285 Port Royal Road, Springfield, Virginia 22161. Telephone 703-321-8517

NTIS-122 (8-75) PLEASE STAPLE BOTTOM ONLY

Previous editions obsolete

AMERICAN REVOLUTION BICENTENNIAL 1776-1976

DATE: 3-3-77

TO: Micrographics Division, Office of Publications.
FROM: Special Reproduction Unit, NTIS

SUBJ: LOAN AND LAST COPY TRANSMITTAL DOCUMENT PROCESSING

ACCESSION NUMBER PB262816

A. LOAN ✓ B. LAST COPY _____

Document may be unbound

Return document and related material to Special Reproduction Unit, NTIS, ATTN: C. Varney.

Please complete processing and return material to SRU, NTIS not later than 3-10

ISSUE NO. 77-07

A. REG. ✓ B. SIR _____

TECHNICAL REPORT DATA
(Please read Instructions on the reverse before completing)

1. REPORT NO. EPA-600/2-77-041	2.	3. RECIPIENT'S ACCESSION NO.
4. TITLE AND SUBTITLE Research Needs for Automation of Wastewater Treatment Systems		5. REPORT DATE January 1977 issuing date
		6. PERFORMING ORGANIZATION CODE
7. AUTHOR(S) Buhr, H. O., Andrews, J. F. and Keinath, T. M., editors		8. PERFORMING ORGANIZATION REPORT NO.
9. PERFORMING ORGANIZATION NAME AND ADDRESS Clemson University Clemson, South Carolina		10. PROGRAM ELEMENT NO. 1 BC 611
		11. CONTRACT/GRANT NO. R-803214
12. SPONSORING AGENCY NAME AND ADDRESS Municipal Environmental Research Laboratory Office of Research and Development U.S. Environmental Protection Agency Cincinnati, Ohio 45268		13. TYPE OF REPORT AND PERIOD COVERED Final 4/74 - 12/74
		14. SPONSORING AGENCY CODE EPA-ORD

15. SUPPLEMENTARY NOTES

16. ABSTRACT

This report summarizes the discussions of the workshop. The primary purpose of the workshop was to define and establish priorities for research needed to automate wastewater treatment plants. Also, addressed is the effect of automation on the design and operation of wastewater recycle systems. The workshop indicated a need for an information clearinghouse, international exchange of data, and projected a philosophy of wastewater renovation as opposed to processing wastewater to the mininum quality requirements. The cost effective application of instrumentation and automation to wastewater management systems will be a key to implementing this philosophy.

17. KEY WORDS AND DOCUMENT ANALYSIS

a. DESCRIPTORS	b. IDENTIFIERS/OPEN ENDED TERMS	c. COSATI Field/Group
Automatic Control* Automation, Instruments, Management Planning and Systems Engineering, Research, Sensors	Wastewater Treatment Automation, Automation Research Needs.	13B

18. DISTRIBUTION STATEMENT Reproduce best way possible.	19. SECURITY CLASS (This Report) Unclassified	21. NO. OF PAGES 134
	20. SECURITY CLASS (This page) Unclassified	22. PRICE

EPA Form 2220-1 (9-73)

PB 262 816

REPRODUCED BY
NATIONAL TECHNICAL
INFORMATION SERVICE
U. S. DEPARTMENT OF COMMERCE
SPRINGFIELD, VA. 22161

EPA-600/2-77-041
January 1977

RESEARCH NEEDS FOR AUTOMATION OF WASTEWATER TREATMENT SYSTEMS

Proceedings of a Workshop Held at Clemson, S.C. September 23-25, 1974

edited by

H.O. Buhr, J.F. Andrews, and T.M. Keinath
Clemson University
Clemson, South Carolina 29631

Grant No. R-803214

Project Officer

Joseph F. Roesler
Wastewater Research Division
Municipal Environmental Research Laboratory
Cincinnati, Ohio 45268

MUNICIPAL ENVIRONMENTAL RESEARCH LABORATORY
OFFICE OF RESEARCH AND DEVELOPMENT
U.S. ENVIRONMENTAL PROTECTION AGENCY
CINCINNATI, OHIO 45268

DISCLAIMER

This report has been reviewed by the Municipal Environmental Research Laboratory, U.S. Environmental Protection Agency, and approved for publication. Approval does not signify that the contents necessarily reflect the views and policies of the U.S. Environmental Protection Agency, nor does mention of trade names or commercial products constitute endorsement or recommendation for use.

CONTENTS

Page

FOREWORD 5

WORKSHOP OBJECTIVES 7
Andrew W. Breidenbach, Environmental Protection Agency

WORKSHOP SUMMARY 9
William A. Rosenkranz, Environmental Protection Agency

WASTEWATER COLLECTION SYSTEMS

Automated Collection Systems Instrumentation Needs 12
Curtis P. Leiser, Municipality of Metropolitan Seattle

Present Practice and Research Needs in Wastewater Collection System Design and Operation 18
James J. Anderson, Watermation, Inc.

Discussion 19

Report of Working on Wastewater Collection Systems . 21
John A. Lager, Metcalf & Eddy, Inc.
Harold Torno, Environmental Protection Agency

BIOLOGICAL TREATMENT PROCESSES

Dynamics and Control of Biological Treatment Processes 26
John F. Andrews, Clemson University

Automation of the Activated Sludge Process 38
Michael J. Flanagan, Brown & Caldwell Consulting Engineers

Discussion 46

Report of Working Party on Biological Treatment Processes 52
Paul H. Woodruff, Roy F. Weston, Inc.
A. W. West, Environmental Protection Agency

PHYSICOCHEMICAL PROCESSES

Field Experiences with a Pilot-Physical-Chemical Treatment Plant 56
Walter W. Schuk, Environmental Protection Agency

Automation of Physical and Chemical Processes 58
Thomas M. Keinath, Clemson University

Discussion 64

Report of Working Party on Physicochemical Processes 66
Wesley W. Eckenfelder, Jr., Vanderbilt University
John Stamberg, Environmental Protection Agency

Page

Report of Working Party on Physicochemical Processes 66
Wesley W. Eckenfelder, Jr., Vanderbilt University
John Stamberg, Environmental Protection Agency

SLUDGE PROCESSING, TRANSPORT AND DISPOSAL

Automation of Sludge Processing, Transport and Disposal 70
Bart T. Lynam, Raymond R. Rimkus and Stephen P. Graef, The Metropolitan Sanitary District of Greater Chicago

Control of Sludge Handling: Some Successes and Problems 72
Joseph B. Farrell, Environmental Protection Agency

Discussion 76

Report of Working Party on Sludge Processing, Transport and Disposal 79
Richard I. Dick, University of Delaware
John R. Trax, Environmental Protection Agency

COMPUTER APPLICATIONS IN AUTOMATION

Current Practice in Instrumentation and Computer Application at the County Sanitation Districts of Los Angeles County 84
Walter E. Garrison, Kip Payne and Tim Haug, County Sanitation Districts of Los Angeles County

Computer Applications in Automation 99
William E. Dobbins, Teetor-Dobbins, P.C.

Discussion 106

Report of Working Party on Computer Applications . . 109
Carmen F. Guarino, Philadelphia Water Department
John M. Smith, Environmental Protection Agency

EVALUATION OF THE EFFECTIVENESS OF AUTOMATION

Evaluation of the Effectiveness of Automation 114
Joseph F. Roesler, Environmental Protection Agency

Field Evaluation of the Effectiveness of Automation . . 118
Allen E. Molvar, Raytheon Company

Discussion 128

Report of Working Party on Evaluation of Effectiveness 130
Walter G. Gilbert, Environmental Protection Agency
James A. Mueller, Manhattan College

LIST OF PARTICIPANTS 133

FOREWORD

Improvement of the operation of municipal wastewater treatment systems is one of the nation's major environmental problems. Possible solutions to this problem are increases in the quantity and quality of personnel involved in operations and/or increasing use of automated systems. The need for an increase in the quantity and quality of personnel is well known and has been the subject of numerous conferences; the prospect of improving operations through the use of automation, however, is not as well recognized. There are many reasons for this, but one of the most important is that research efforts expended on the automation of wastewater treatment systems are relatively minor when compared with research on other aspects of water pollution control.

There is currently a great interest in the automation of wastewater treatment systems as evidenced by the attendance of more than 200 persons at an International Workshop on Instrumentation, Control and Automation of Wastewater Treatment Systems which was held in London during the fall of 1973. The automation systems reported on at that workshop for cities such as Atlanta, Chicago, London, Los Angeles, Paris, Philadelphia, etc., will greatly affect the performance of wastewater treatment systems valued at many millions of dollars. However, few of the papers presented at the workshop were oriented toward research, which again is an indication that relatively few researchers are currently engaged in this area. Most automatic control installations for wastewater treatment systems are, of necessity, designed on an empirical basis because of a lack of more fundamental knowledge concerning such factors as dynamic behavior, control strategies, component reliability and cost/benefit analysis.

The above statements illustrate the great need for research on the automation of wastewater treatment systems. However, in order to accomplish such research in the most effective manner, it is necessary to first clearly define and establish priorities for the research needed. Recognizing this, the U. S. Environmental Protection Agency requested Clemson University to organize and conduct a **Workshop on Research Needs for Automation of Wastewater Treatment Systems.**

In order to insure the incorporation of all viewpoints, participants were invited from government regulatory and research agencies, universities, operating engineers and managers of large treatment systems, consulting engineering firms and equipment manufacturers. Extensive and lively discussion, which forms the heart of a workshop, was encouraged by dividing the workshop into three portions. The first portion consisted of formal presentations of present practice and current research on each of six topics, by authorities on these specific topics. These formal presentations, and the discussions associated with them, served to set the stage for individual meetings of working parties on each of the six topics, where special attention was devoted to stating the problems and specifying research needed to solve these problems. The cochairmen of the working parties then prepared brief documents summarizing the discussion in their session and orally presented these for discussion at a reassembly of all of the Workshop participants. Finalization of these documents, representing the deliberations of each working party and the viewpoints expressed at the reassembly, was accomplished at a meeting of the cochairmen of the individual working parties in Washington on November 19, 1974. Special thanks are due to the cochairmen of the six working parties for their performance of a difficult and time-consuming task.

These proceedings represent the integrated best judgement of the experts gathered at the workshop as to research needs for the automation of wastewater treatment systems. It should provide a firm foundation for the development of a national research program in this important area.

John F. Andrews, Cochairman
Workshop on Research Needs
for Automation of Wastewater
Treatment Systems

April 1975

 Preceding page blank

WORKSHOP OBJECTIVES

Andrew W. Breidenbach
Director, National Environmental Research Center, Environmental Protection Agency, Cincinnati, OH 45268

This workshop was developed to provide an opportunity to discuss problem areas and research needs for the automation of wastewater treatment plants. The discussion generated should have significant impact on future research and should ultimately affect the design and operation of wastewater treatment plants.

Clemson was selected as the site for this Workshop because of its leadership in the area of control engineering as applied to environmental systems. Recognizing automation as an area of important research, the United States Environmental Protection Agency at the National Environmental Research Center–Cincinnati (NERC) initiated a research program in automatic control of wastewater treatment plants a little over two years ago. Because of mutual interests, a jointly sponsored workshop to define research needs seemed essential if we were to achieve our goal of having fully automated wastewater treatment plants on stream in the 1980's.

Looking back only ten years, it is apparent that automation of wastewater treatment systems is a recently developed technology that has yet to be fully exploited.

Ten years ago, the dissolved oxygen (DO) probe was emerging from the laboratory for application to relatively clean water. The thought of placing a DO probe in the hostile environment of a wastewater treatment plant appeared to be an unworkable concept. Today, it is a reality. A recent survey sponsored by the U. S. Environmental Protection Agency found that 12% of the 50 plants surveyed have automatic on-line DO control.

Total organic carbon (TOC) was virtually an academic curiosity ten years ago. At that time, the Robert A. Taft Laboratory had just received the prototype of a commercial TOC analyzer. However, less than ten years later, continuous on-line TOC analyzers have become available on the open market. The same can be said about process control computers; they were available ten years ago, but they were expensive and difficult to program. Yet, some process computers can be programmed easily in languages as simple as or simpler than FORTRAN. The development of the IC chip in the sixties gave birth to micro-computers. Properly applied, these computers are very effective for data acquisition and process control in situations where previously they were not cost-effective. Today, more than two dozen plants are on stream or will be on stream with process computer installations. Some cities such as Seattle and Minneapolis have been using a computer for several years to control the stormwater flow in their combined sewer systems. They are now expanding their computer installations to control other aspects of wastewater processing as well.

Although progress is being made, it is being made at a relatively slow pace. One of the questions we must face at this workshop is: What is delaying the implementation of automation in wastewater treatment plants? Is it the lack of suitable sensors for automatic on-line control? For example, consider the recently developed ammonia probe: It does not appear to be applicable for automatic on-line control for nitrogen removal because the probe requires considerable maintenance by a skilled technician. The same can be said for the continuous on-line TOC analyzer. It is known that many plants in the country simply cannot afford to hire such skilled technicians. The lack of sensors and trained technicians may be the major deterrent to the automation of treatment plants. If so, is there a solution to these problems?

To control a property of a process stream, an engineer must be knowledgeable in several areas. He must be familiar with the characteristics and the limitations of measuring devices, with the treatment plant's chemical and biological reaction kinetics and with the process equipment in which these occur. A knowledge of the plant's design limitations and its operational stresses in terms of the loadings and environmental changes to which this equipment will be subjected is essential. Control theory, computer technology, and systems analysis are important tools in this field. Thus, special training is often necessary for an effective environmental systems and control engineer.

Until recently, there were very few doctoral degrees awarded in the area of systems analysis. Now, a whole new field has opened. Clemson University was one of the first universities in the United States to apply systems analysis techniques to the automatic control of wastewater treatment plants. The first doctoral degree in the area of environmental systems control engineering was awarded here in the middle sixties. This is a new field that has grown very rapidly with continuing growth potential for further development.

If automated treatment is to be applied, the existing technology must first be examined. An open attitude towards automation is a requirement. Evaluation of this technology and adaptation of it to our needs will then follow. Finally, we must improve the technology where necessary. Thus, the development of automation will require resources, hard work, and research.

The first objective of this workshop is to instill enthusiasm in each of us. We must convince ourselves (and then others)

Preceding page blank

that resources, hard work, and research will be well-spent on automation of wastewater treatment plants. Today, I am confident that we have accomplished the first objective merely by having carried out this workshop. Next, we must exchange information and experiences, communicating our successes and failures.

The second objective of this workshop, and one that vitally concerns EPA's National Environmental Research Center in Cincinnati, is to assess the research necessary to bring about successful and cost-effective automation of wastewater treatment plants throughout the United States. We must establish a channel of communication between the users of our research (especially the designers, operators, engineers, and managers of our wastewater treatment plants) and the persons who influence the drafting and enforcement of state and federal regulations. One of the ultimate research goals of the Center is to develop fully automated wastewater treatment systems. This includes flow routing and storage in the collection systems as well as processing technology such as biological treatment, physical-chemical treatment and sludge handling and disposal. We are interested in defining the most rewarding areas for further research to extend the present state-of-the-art and develop practical control technology. We need to evaluate control techniques such as F/M control, with on-line respirometers or feedforward TOC measurements. We wish to discuss treatment plant reliability ideas such as control of toxic wastes entering the plant. We wish to explore the possibility of how best to utilize a process computer for automating a wastewater treatment plant. We also wish to discuss the effectiveness of various automatic control strategies and how these control strategies would improve the performance or lower the cost of operating a wastewater treatment plant. And finally, we would like to discuss methods of improving the plant operators' attitudes towards automation. Ultimately, it is the operator who must live with the automated plant. His attitude and his approach towards operating an automatic plant will certainly help determine the success or failure of automation. What additional research do you want to see done in this area? What are the problems that your particular group are experiencing on a day-to-day basis? And finally, do you have any ideas that would prove potentially profitable for automation of wastewater treatment plants in this country—ideas that you would like to see developed, even though you have neither the time or the funds to do so?

If we have identified and prioritized, through some logical process, a set of research needs, we will have taken a stride toward more cost-effective wastewater treatment.

WORKSHOP SUMMARY

William A. Rosenkranz
Director, Municipal Pollution Control Division,
Environmental Protection Agency, Washington, DC 20460

The automation of wastewater treatment systems offers a number of potential benefits including improved performance, reduction in size and construction cost of new systems, improved reliability, more efficient use of operating personnel, and minimized operating costs. These benefits are clearly "potential" since application of instrumentation and automation in the wastewater field is still minimal. Compared to most industrial processing, automation of wastewater treatment systems is in its infancy. The purpose of this Workshop was to define how to move this specialized technology progressively through adolescence and into adulthood.

The philosophy for addressing wastewater management systems requires change. A treatment system should no longer be considered as a marginal water pollution control facility, but rather as a production facility for wastewater refining or renovation. The medical and chemical industries developed the philosophy of pushing the newest technology into their respective fields many years ago. It appears now that basic water pollution control technology is sophisticated enough to adopt such a philosophy and thus attain this new goal.

In order to accomplish the automation of wastewater control and treatment systems in the most effective manner, it is necessary to first clearly define the research and development needed and then establish priorities for implementation. More than one hundred participants attended the "Workshop on Research Needs for Automation of Wastewater Treatment Systems". In order to insure a broad coverage of all viewpoints, the participants represented government regulatory and research agencies, universities, operating engineers and managers of large treatment systems, consulting engineering firms, and equipment manufacturers. The first day of the Workshop was devoted to the presentation and discussion of current practice and research activities directed towards automation of wastewater treatment systems. Experts from both government and private industry gave these presentations in order to identify needed research and development. From these presentations, it can be concluded that most instrumentation for control of wastewater systems is, of necessity, designed on an empirical basis because of a lack of more fundamental knowledge concerning such factors as dynamic behavior, control strategies, component reliability and cost-benefit analysis. The effect of automation on the design and operation of wastewater recycle systems and manpower requirements for treatment plant operation was also considered.

Working parties were organized to address the following subject areas: (1) automation of wastewater collection systems, (2) automation of biological treatment processes, (3) automation of physical-chemical processes, (4) automation of sludge processing, transport and disposal, (5) computer applications, and (6) evaluation of the effectiveness of automation.

A number of research needs were identified which were common to most or all of the six subject areas. These common research needs were:

(1)The Workshop recommended that an information clearing-house dealing with instrumentation and automation be established within EPA. For example, a great deal of instrument testing on a specific case basis is being done, yet results are not available to the technical community on a broad basis. A central location for gathering and dispensing such information would be of considerable assistance to those planning and using instruments in municipal wastewater systems.

(2)Development of efficient and dependable sensors is needed. This is a prerequisite to the implementation and verification of virtually all control strategies. Some of the sensors needing improvement or development include: sludge blanket level indicator, settling velocity indicator, respiration rate sensor, suspended solids sensor, on-line replacement for the BOD test and on-line analysers for ammonia, nitrate and phosphorous.

(3)Performance specifications should be developed for sensors and instrumentation as a guide to the user community. This could be in the form of a testing protocol and procedures for evaluation of sensor and instrumentation packages.

(4)With respect to treatment processes and treatment systems, it was determined that a logical progression of research and development should be as follows:

a. Development of dynamic mathematical models for individual processes. In several cases, this has been partially accomplished although many of the models should be further refined using the latest data available. An important long-term goal is incorporation of the individual process models into an overall mathematical model for treatment plants.

b. Tentative control strategies based on computer simulation using mathematical models should be developed. A small amount of work is now on-going in this area.

c. Control strategies should be evaluated at pilot scale to select the most promising for future demonstration. Such evaluation has frequently been limited in the past by lack of adequate sensor capability.

d. The most promising control strategies should be demonstrated at full scale, including cost/benefit analysis.

(5)A protocol should be established to evaluate instrumentation and automation system design and selection. This protocol should take into account all relevant aspects of the problem such as direct cost savings, system performance and reliability, minimization of the consumption of energy and other resources, and the man-machine interface.

(6)Instrumentation and automation control strategies should be expanded to include interrelationships between liquid and solids processing, stormwater and dry-weather flow control and treatment, and eventually area-wide wastewater management.

Each individual working party identified research and development needs specific to the assigned subject area. Highlights from the six groups are as follows:

The importance of addressing the area of instrumentation and automation in terms of a total system was identified by the working party dealing with **automation of wastewater collection systems.** It is very important that the demonstration of total control systems with the necessary operating strategies incorporating the newest technologies be accomplished. This could even include sophisticated weather forecasting and tracking. The role and benefits of flow equalization need to be better documented and more widely applied. Coupled with automation of treatment processes, this technique may have significant plant performance advantages.

The **automation of biological treatment processes** group identified a need for great improvement in information exchange, particularly from the operator to the manufacturer and from the manufacturer back to the operator. Development of performance specifications and acceptance standards for instruments was also emphasized. In addition, the development of adequate mathematical process models, practical operating control strategies, real-time monitoring, and improvements in the man-instrumentation interface were areas of research that were identified.

The matter of dynamic models for process control and monitoring functions was also highlighted in the area of **physical-chemical systems.** Control strategies and instrumentation development to facilitate implementation of control strategies were two key needs identified. Specific needed research was identified for several treatment processes including chemical clarification, the deep-bed filtration process and granular carbon adsorption.

Working party deliberations indicated that **sludge processing, transport and disposal** should be placed at the highest priority level. The need for development of a variety of sludge quality sensors was identified, particularly sensors to measure settleability, dewaterability and other similar parameters.

The **computer applications** working party indicated that improved capability to measure flow is needed throughout the wastewater control and treatment system. This is a difficult technical problem and, although advances such as the use of sonic devices have been made in recent years, no major technological breakthrough appears to be on the horizon. Improved flow measuring capability is a key to total system management. Development of control strategy models, including reliability testing, was highlighted as a research need. Determination of specifications for computer selection and utilization of a centralized computer for data acquisition and report preparation were areas deemed worthy of research. The need for increased educational activities to produce personnel who understand both the computer and treatment plant operations was also stressed.

The group dealing with evaluation of the **effectiveness of automation,** indicated that a cost-effectiveness evaluation protocol is needed so that meaningful comparisons of instrument applications and control systems can be made. Such comparisons are vital to selection of control systems for specific cases and for evaluating cost-effectiveness of alternate systems of control and treatment. The concept of using a man-in-the-loop to control several satellite plants through the use of a centralized computer and terminals was proposed as a potentially cost-effective technique.

The Workshop also discussed the matter of eligibility of instrumentation and automation within EPA's Construction Grants program. Recognizing that many treatment plants involving large sums of money are funded under the EPA grants program, a need for detailed guidance concerning eligibility conditions for instrumentation and automation was identified. Computer applications are of specific concern.

Although not identified as a research need, the Workshop noted that the United Kingdom has recently established an instrumentation and automation Working Party for the purpose of establishing and advancing the state-of-the-art. Based upon this information, the Workshop recommended that EPA explore the possibility of setting up a similar panel in the United States in order that we can have a direct interchange of information, ideas and technology with the United Kingdom working group and similar groups throughout the world.

In conclusion, the Workshop developed many specific research needs related to the instrumentation and automation of wastewater treatment systems. It indicated a need for an information clearinghouse, international exchange of data, and projected a new philosophy of wastewater renovation as opposed to processing wastewater to the minimum quality requirements. The cost-effective application of instrumentation and automation to wastewater management systems will be a key to implementing this philosophy.

AUTOMATION OF WASTEWATER COLLECTION SYSTEMS

Workshop on Research Needs
Automation of Wastewater Treatment Systems

AUTOMATED COLLECTION SYSTEM INSTRUMENTATION NEEDS

Curtis P. Leiser
Manager of Computer Services, Municipality of Metropolitan Seattle,
410 West Harrison Street, Seattle, WA 98119

INTRODUCTION

One need only review recent publications and conference agenda of technical organizations such as ASCE, WPCF and APWA to appreciate the growing interest nationwide and, to some degree, internationally in wastewater collection system control and treatment research. Centralized collection system automation is in its infancy. The number of **operating** computerized systems can be counted on one hand. However, many more are on the drawing boards for consideration or construction in the near future. The computerized systems have generally struggled through technical and funding problems typical of research and development work. To this date, the systems which have been developed are not only atypical in design but also contain significantly different degrees of monitoring, control and the ultimate form of automation which involves optimized simulation or modeling.

This paper will concentrate on the hardware instrumentation considerations of these systems. Primary reference will be to the results and recommendations developed during a six-year demonstration grant study between the Environmental Protection Agency and Seattle Metro which culminated in a report titled "Computer Management of a Combined Sewer System" (1). It was found during this study that there was a considerable amount of research that could be accomplished to overcome many of the instrumentation problems and shortcomings which were revealed during the development of Seattle's computer-controlled system. It is appropriate, at this time, to present a short summary of the Seattle system, its objectives and its equipment. More detailed information can be obtained from the list of references at the end of this paper (2-6).

SEATTLE METRO SYSTEM

In January of 1971, the Municipality of Metropolitan Seattle (Metro) first placed into operation a monitoring and control facility termed CATAD or "Computer Augmented Treatment and Disposal System." This centralized control system encompasses approximately a ten-square-mile combined sewer system in and around the City of Seattle. The main objectives of the CATAD system are:

1. To utilize the maximum storage capability of trunk and interceptor lines within a combined sewer system built to ultimate capacity so that overflows caused by storm inflow are reduced or eliminated.
2. To regulate daily flows to treatment plants, thereby aiding in the stabilization of the treatment processes and effectively increasing the dry-weather capacity of existing plants.
3. To select the overflow points which will cause the least harm to receiving waters, beaches and marine life during intense storms when overflows cannot be avoided.
4. To eliminate the need for or reduce the cost of total separation of combined sewers which would be especially costly and disruptive to commercial and industrial areas of the city.
5. To monitor and control mechanical equipment within remote stations while accomplishing the above objectives and,
6. To retain dry- and wet-weather flow data of component collection systems for subsequent identification of infiltration problems and for potential charges in accordance with those flows.

At the time the construction of the computerized monitoring and control system began, a consideration portion of the remote equipment was already installed and operating. It seemed logical to incorporate as much of that system as possible and interface the computer-control equipment to the existing regulator controls. Thus, two objectives would be achieved, (a) a minimum disruption of existing control equipment which was proven to be reliable and (b) the local control system within each station could serve as a backup

control capability in the event of computer or communications equipment failure.

The existing control equipment was primarily pneumatic, while newer station designs included electronic control equipment to facilitate computer interface installation. Modifications to older stations included new precision sensors, communication and control equipment, to adapt existing regulator and pumping stations for remote control capability.

Key elements of the system are pictured in Figure 1. At the heart of the CATAD system is the real-time process control computer and background devices which allow for the programming of that computer. Specially designed interfacing or connection equipment was installed to allow the computer to communicate through cables to many mechanical devices. At the central console, information is collected from remote stations and is converted to visual displays. Control pushbuttons, alarm and status indication lights, radio and telephone communication equipment and logging teletypes complete the components of the central console. In addition, a wall map showing the geographic locations of the collection system together with general status-indication lights for each station combine to offer the human console operator all information and control features which could be expected of a computerized wastewater collection system.

A second interface "black box" connects a series of water quality monitors to the computer. These monitoring stations are located on the Green-Duwamish River south of Seattle and monitor such conditions as temperature, dissolved oxygen, conductivity, pH and solar radiation. These data are fed to the computer and are logged on a permanent paper form as well as stored on magnetic tape for later statistical processing. The information thus becomes available to enable either the human operator or, through programming, the computer, to select overflow points which would provide the least impact upon receiving waters.

A third interface connects the computer to two satellite consoles which are compact versions of the central console. These satellite consoles are able to display the same data and to command remote station actions independently of the central console. The Renton satellite console is the newest system addition and has been given more flexibility by utilizing a mini-computer rather than a fixed logic terminal, to perform many functions. The mini-computer was expected to be adapted for use in process control loops during the expansion of Metro's Renton secondary treatment plant, but the $100,000 estimated cost for the control interface aborted that plan until interfacing prices become more realistic.

Thirty-seven remote stations communicate to the computer through the last interface. A telemetry control unit (TCU) at each remote station acts as an interpreter to collect, convert and assemble station information into a form which can be transmitted over telephone lines to the computer. Figure 1 shows the types of information collected from three different representative remote stations passing through a series of electronic units for transmission to the computer. Commands return in the opposite direction to control regulation or pumping stations in the combined sewer portion of the collection system.

INSTRUMENTATION AND SENSORS IN CONTROL SYSTEMS

The objective of the data collection system is (1) to make a continuous, accurate measurement of all information necessary to monitor the safety and operation of a station and calculate required flow and storage data to facilitate logical control decisions and (2) to transmit that information with some degree of security to the central computer system. Sensors, or measuring devices, must be present to continuously monitor hydraulic, meteorologic, atmospheric and water quality parameters for optimum control of a combined sewer system. A minimum system must be capable of monitoring the hydraulic parameters described below.

Flow Calculations

Obviously the most important parameter to measure in a sewage collection system is flow. Generally the more flow data accumulated from the various elements of a collection system, the better will be the control and predictive modeling capabilities of that system. A measurement of water depth together with known sewer configuration data can provide open-channel conduit flow values by incorporating one of the variations of Manning's equation. More accurate system flows are calculated by measuring depth and using metering sections such as the Palmer-Bowles flume where space is available or Parshall flumes where head losses are not critical.

A measured depth may also allow the calculation of flow through sluice gates which may be manually or mechanically driven. Added to the measurement of depth must be the position of the control gate in the stream flow. By incorporating these values with standard orifice formulae, the flow may be calculated with some degree of reliability. Flow calculations however, can be complicated by upstream or downstream backwater and submergence effects.

Different measurements are necessary to calculate pumped flow in a collection system. Four measuring techniques are currently being utilized in Metro's CATAD system. Wetwell water level and pump rotational speed allows calculation of flow through standard pump curves provided by the equipment manufacturer. Where the pumping station force main is long enough to cause sufficient head loss, force main pressure may be measured and flow calculated with calibration curves. More expensive but direct-reading meters such as a magnetic flow meter or a calibrated velocity meter are additional means of obtaining flow information from pumping stations or submerged conduits.

A continuous water depth measurement at one or more locations will also provide system storage data for use in controlling and minimizing overflows. A single depth measure-

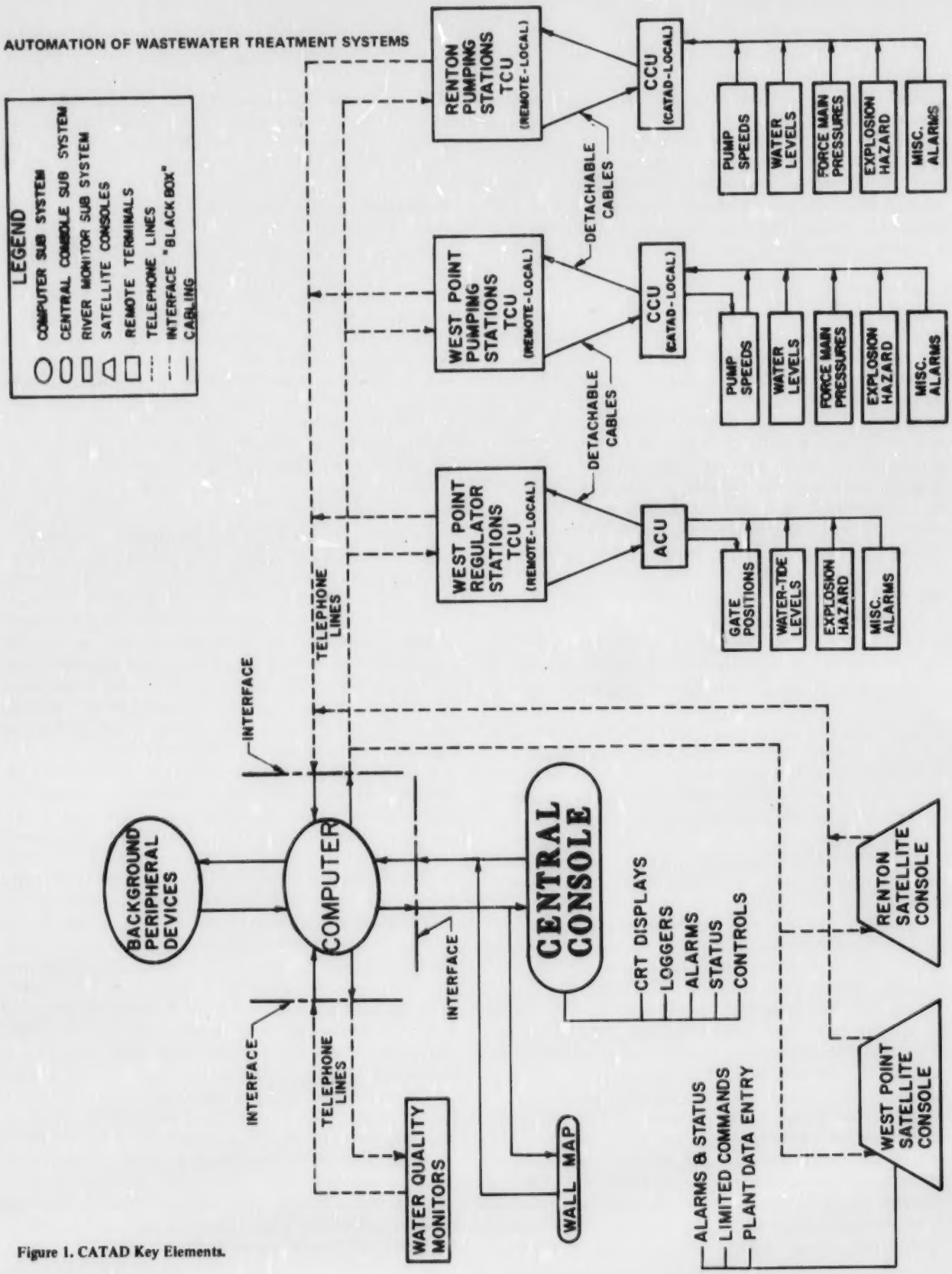

Figure 1. CATAD Key Elements.

ment within a storage tank is a simple method of calculating storage. In circular conduits the calculation is more complex but can be simplified by having more than one depth measurement available.

Rainfall is the minimum meteorologic data to be collected and supplied to an automated control system. Rainfall data from each sub-basin will allow the analysis of infiltration and will provide some predictive information for control functions in a combined sewer system. The rain data also provides basic design information for future construction.

Non-Essential Measurement Devices

A sewage collection control system must be primarily concerned with hydraulic measurements described previously, but depending upon the level of sophistication of that system the measurement equipment described below may or may not be present.

Continuous monitoring of water quality within the collection system and in its receiving waters would be of value, in a control decision to select a point of overflow, for example. Quality parameters such as dissolved oxygen level, suspended solids, temperature and biochemical oxygen demand are a sampling of the parameters that would be especially valuable in determining control and design decisions. Automatic sampling equipment may be part of this system and might be triggered either by local conditions or remotely by the computer control center. Sampling devices may be an alternative to continuous monitoring and if so, their operation and performance should be monitored as if the sampling equipment were an integral part of the collection system.

The collection system may contain some type of treatment process entirely separate from the major treatment plant facilities at the end of the collection system. Small local treatment plants or similar facilities to treat overflows or bypasses from the system should be monitored for chlorine residual, for example, or other appropriate performance criteria.

Two or more gaseous parameters may be measured in the collection system. Explosion hazard monitoring is a feature of the Metro Seattle System. Its purpose is two-fold: (1) to provide a safety warning to protect personnel and facilities and (2) to supply information for tracing sources of illegal dumps of hazardous volatile material into the collection system. No method of treating or disposing of hazardous materials within the system is currently being applied. A second valuable measurement which currently is very difficult to obtain without the use of an elaborate series of chemical tests similar to an auto-analyzer is hydrogen sulfide. The purpose of this measurement is to monitor both odor production and corrosion within the sewage collection system.

CATAD INSTRUMENTATION PROBLEMS

As one might expect, there are a great many difficulties encountered during a research and development effort on the scale of the Seattle Metro CATAD control system. The many instrumentation and control problems have been condensed to three general areas:

1. Looking back on the development effort, a timing problem was evident. The majority of design and construction work was done between 1968 and 1970 while some major changes were taking place in the electronics and computer industry. The CATAD system was too far along to reap many of the benefits of these advancements.
2. The tendency of engineers or designers to rely on existing technology, in Metro's system, meant specifying equipment which was generally being successfully applied in industrial situations at the time. This resulted in a larger burden being placed on the interfacing and conversion tasks. The goal of having a local independent control system at each remote station was excellent. However, the dissimilarity between equipment created a great number of difficulties which will be described later in this paper.
3. A final source of problems was the selection of a different set of designers and suppliers for remote station industrial equipment and centralized computer control equipment. An aero-space firm, ready with all the latest electronics technology, was on one side of the interface while an industrial, wastewater-oriented design firm was ready with older, but safer and more reliable equipment, at the other side of the interface.

At this point, the types of equipment problems will be discussed in more specific terms, leading into a list of comments on the type of research which should be contemplated to alleviate these problems.

One broad category of problems developed due to the application of sensitive instruments and sensors in a hostile environment for which they were not designed. Since most of the industrial controls would be adversely affected by humidity and explosive or corrosive atmospheres, a controlled environment contained within an expensive structure was generally provided. These remote stations, in the 1960's, cost an average of $200,000 each. The new station price has now been inflated to an average of $500,000. These high costs limit the number of sites where monitoring and control can take place. In Seattle's system, there are between two and three hundred overflow points (some admittedly very small); however, only approximately ten percent of those sites are monitored and controlled by the CATAD system. Some sensors, such as gate-position indicating devices, would be an excellent selection for a normal environment but in the humid, occasionally explosive atmosphere of the sewage collection system, tests indicated that the equipment could not cope with these conditions without a prohibitive amount of money and space being allocated to provide a special enclosure. Normal utilization voltages, radio-frequency and other electromagnetic disturbances that the heavy industrial-type equipment was

immune to, played havoc with sensitive computer components. Costly damage done to five-volt diode-transistor logic (DTL) by misapplication of line voltage during routine servicing pointed out a need for additional technician training, warning messages and protective devices wherever possible.

When applying sophisticated computer control to a sewage collection system, one naturally thinks of improved precision capability. To obtain five-percent precision, some sensors and control equipment, relatively new on the market, were incorporated into the system. These devices tended to be candidates for extensive and repetitive calibration and demanded a great deal more maintenance than was routinely scheduled for station equipment.

Interfacing, or tying together the computer and remote industrial-grade devices, was another major source of difficulties. The fact that an interface existed was immediate cause for problems because the separation resulted in frequent disputes as to whose responsibility a particular problem was. Since the computer equipment generally requires a specific range for analog measurements, it turned out that a great number of transducers was required because of a distinct absence of commonality between instruments offered by different manufacturers and sometimes even within the separate lines of instruments available from year to year from a single manufacturer. In an early attempt to prevent excessive voltage from harming the solid state electronic equipment at each remote station, a general-purpose industrial interposing relay was installed at every contact-sensing point. Unfortunately, the relay coil itself (approximately 50 per station) generated an extremely fast induced electrical surge during contact activity. This electrical "noise" caused a disturbance within the solid-state logic, which occasionally was of a serious nature and was both difficult to pinpoint and to correct. After a series of studies of the electrical noise problems, remedial shielding measures were successfully implemented (7, 8).

RESEARCH NEEDS

A battery of well designed and tested instrumentation and sensors must be developed. These devices should be modular, heavy-duty, exhibit low long-term drift, and should be easy to calibrate, maintain and replace. They must be designed with enclosures and other protective features suitable for a hostile sewer environment; meaning they should be explosion-proof, resistant to electrical noise, power system voltage, large magnetic fields and power failures. The instrumentation should be digitally oriented and standardized, with no special one-of-a-kind components, so that interfacing and replacement problems are minimized. Ideally, this instrumentation should have small space and power requirements so that $500,000 structures are not necessary to contain it. The new equipment should also be thoroughly tested in non-critical field locations.

A parallel effort in this area would be to establish uniform standards or guidelines for instrumentation and sensors to be used in collection system monitoring and control applications. The Instrument Society of America and American Public Works Association have made some fine efforts towards surveying the instrument field recently (9) but there has been little or no attempt to establish standards in computer control applications in wastewater systems. The Environmental Protection Agency sponsored an excellent summary of automatic sampling equipment (10). However, the report would have made an even greater contribution if it had set some standards and enforcement guidelines. Sampler manufacturers, as well as instrument suppliers, will continue to manufacture an infinite variety of equipment until uniform industry-wide standards and guidelines are set by the Environmental Protection Agency or a similar funding agency on a national scale.

Another research effort tied closely to the previous suggestion is an analysis of the potential for applying pre-programmed mini-computers in monitoring and control applications in the collection system. The mini-computers would replace complex arrays of relays, which are expensive to install and maintain, and prone to failure. Industrial control manufacturers have been making greater use of mini-computers in various applications. However, this equipment has not commonly been applied to the wastewater collection and treatment field.

Flow measurement in the collection system needs a great deal more research. Metro has relied heavily on pneumatic bubblers for water elevation measurement but these devices cost an average of $3-5 per month to operate. Sonar water level sensors which operate for about ten cents per month have been employed by Metro with a mixed degree of success and failure. A thorough investigation of the proper application of sonar and other innovative methods of non-contact measurement would provide a beneficial service to the wastewater collection automation goal. Depth measurement, however, has a drawback in that flow calculation is then required through the use of largely empirical Manning's, orifice or weir formulae. A "characterization" technique should be researched which would allow the direct output of flow from a sensor. By incorporating LSI (Large Scale Integrated) electronic modules into the primary sensor or tapered capacitance probe techniques with direct digital output, a heavy calculation burden on the control computer is thus avoided. A researching of velocity measuring sensors, which might be applied to open-channel flow within sewer systems, would be beneficial in achieving more reliable flow calculation. Magnetic and ultrasonic flow meters have been found very useful in generating reliable flow data where a full pipe is available, such as in a pump force main. But precalibrated and tested ultrasonic flow meters are not currently available and some additional research in the application of these devices would prove valuable.

Machine vibration and heat measurement in pumping unit control systems has been applied successfully at Metro as well as in other agencies. However, a limited amount of application information is available on vibration monitoring of low-speed

equipment (less than 1,000 RPM).

Considerable research has been completed and workable equipment is now available to handle petroleum products dumped into open waters. But oil spills are a more frequent problem in combined sewage collection systems. Reliable explosion-hazard monitors can now detect the presence of volatile products. Research is necessary to detect other illegal petroleum fractions, and, even more important, to recommend methods of handling illegal discharges before they can enter and foul treatment processes.

Precise gate position measurement is another area which requires some additional research. Mechanically or hydraulically driven sluice gates are easier to monitor than inflatable gates. However, some problems still exist which could be improved through additional research. Metro has employed multi-turn potentiometers connected to gate drive gears to produce an analog signal proportional to gate travel. The aerospace industry has used slide wire technology with a great deal of success. However, collection systems would benefit from additional study and the incorporation of digital encoding to minimize calibration and drift problems.

A great deal of research is required to determine what type of monitoring and control equipment is necessary for treatment facilities within the collection system. Such facilities would, for example, provide sedimentation, chlorination or other form of treatment to combined sewage overflows or pump station by-passes. Water quality monitoring and sampling within the collection system to determine treatment levels and influence storage and control decisions is currently not being done in a continuous on-line mode. These research efforts are quite similar to treatment plant control and monitoring problems and will be left for later speakers in this workshop to discuss.

CONCLUSIONS

There have been a significant number of promising developments in the computer and electronics fields which should make wastewater collection system automation much easier in the future. Direct digital output sensors, noise-resistant solid-state electronics, photo-optic isolators and other devices now need to be assembled into a completed system to serve as a guide to other agencies seriously considering automation. The EPA's Taft Center should serve as a storehouse for the latest automation technology, and be the headquarters for the issuance of new standards and guidelines for control and monitoring instruments and sensors. Seattle Metro's pioneering efforts in wastewater collection system control have shown that once the research and development hurdles are overcome, the automation concept holds great promise toward solving the problem of handling urban drainage within combined sewers. Metro will continue to cooperate with the Environmental Protection Agency and other municipal agencies in furthering wastewater collection system automation efforts.

References

1. Leiser, C. P., "Computer Management of a Combined Sewer System", USEPA Report No. EPA-670/2-74-022, National Environmental Research Center, Cincinnati, OH (1974).
2. Gibbs, C. V. and Alexander, S. M., "CATAD System Controls for Regulation of Combined Sewage Flows", *Water & Wastes Eng.*, 6, No. 8, 46-69 (1969).
3. Leiser, C. P., "Maximizing Storage in Combined Sewer Systems", *Water Poll. Control Res. Ser.*, Project No. 11022-ELK, Washington, DC (1971).
4. Gibbs, C. V., Alexander, S. M. and Leiser, C. P., "System for Regulation of Combined Sewage Flows", *Jour. San. Eng. Div., Proc. Amer. Soc. Civil Engr.*, 98, SA6, 951-972 (1972).
5. Mallory, T. W. and Leiser, C. P., "Control of Combined Sewer Overflow Events", Paper prepared for the 1973 APWA Public Works Congress and Equipment Show, Denver, CO, September, 1973.
6. Mallory, T. W., "Seattle's CATAD", *APWA Reporter*, 41, No. 18, 26-27 (1974).
7. Metropolitan Engineers, "Preliminary Final Report–CATAD Noise Analysis", Report to the Municipality of Metropolitan Seattle, June, 1973.
8. Boeing Company, "Electromagnetic Compatibility Study of the CATAD System", Report to the Municipality of Metropolitan Seattle, June, 1973.
9. American Public Works Association, "Feasibility of Computer Control of Wastewater Treatment", EPA Contract 14-12-580, December, 1970.
10. Shelley, P. E. and Kirkpatrick, G. A., "An Assessment of Automatic Sewer Overflow Samplers", USEPA Report No. EPA-R2-73-261, Washington, DC (1973).

PRESENT PRACTICE AND RESEARCH NEEDS IN WASTEWATER COLLECTION SYSTEM DESIGN AND OPERATION

James J. Anderson
President, Watermation, Inc., 1404 E. 9th Street,
Cleveland, OH 44114

INTRODUCTION

The task of defining research needs concerning collection systems seems somewhat difficult, especially in the light of current practice. Most current sewer design is based on steady-state, mostly linear relationships, and sewer systems operate with only gravity in control.

Because of my experience, I will confine my remarks to existing sewer systems.

The major problems in existing sewers today, in order of importance to the homeowner-taxpayer, are 1) stoppage, 2) inadequate capacity, and 3) discharge of untreated polluted water. In most cases, the untreated discharge is because of inadequate capacity, resulting in the placement of relief outlets.

Malfunctioning of sewer systems has primarily been a result of design methods, the long life of underground structures, and unpredictable urban growth and development. Current design methods have already been mentioned. Many of the sewers in use today were sized with now antiquated methods, fifty to one hundred years ago. It is rather surprising how well such systems are performing today. In many cities, the combined sewers have served effectively because they were sized on the basis of estimated runoff from the tributary area, and not on the basis of estimated wastewater flow.

With the advent of the first major interceptor sewer and treatment plant construction early in this century, and even in recent large systems constructed in the 1950's, engineering judgement, the public, and economics allowed the use of interceptor sewers which captured only 90 to 95 per cent of the dry-weather flow. Treatment plants that were constructed had very limited capacity to treat excess flows during runoff.

Our work has been to provide controlled dispatching techniques to better use existing sewer systems and to determine what minimum improvements can be made to nearly eliminate untreated overflow. In order to accomplish this, we have developed dynamic analysis methods for design and operation. We have also reviewed new and old sewer system components and selected those which can be effectively used in dynamic operation of sewers. As one client put it, we are assisting Newton in his previously unassisted control of sewers!

COLLECTION SYSTEM COMPONENTS

Components which can be used in a controlled combined sewer system include automated regulators, relief sewers, and off-line storage. Wet-weather treatment can be accomplished by utilizing excess capacity in the dry-weather treatment plant as well as additional wet-weather treatment facilities.

CONTROL SYSTEM COMPONENTS

The control system components include a rain gauging network, sewer level measurement, a system simulation model, a system optimization model, data acquisition and control equipment, and a process control computer.

DESIGN METHODS

Because we propose to take advantage of the dynamic characteristics of rainfall, runoff, and of the sewer system, we must use dynamic design methods. Very briefly, we use design dynamic rain events in the simulated model to generate the hydrographs and materials balance in an existing sewer system. The output from the simulation is used as input to the optimization model. The results of the optimization are combined with engineering judgement, which cannot be computerized, to select a final design. The expected performance of the final design is then analyzed by simulating a number of design rain events, ranging from light to heavy, which represent the spectrum of local rain events over a period of years.

RESEARCH NEEDS

Assuming that research will precede practice by a number of years, and that dynamic design and control methodology is in its infancy, a number of research opportunities can be foreseen in the area of our experience.

Among the most significant are:

1. Determine where dynamic design methods apply and where steady-state or handbook methods will suffice.
2. Develop dynamic design methods not requiring the designer of a small system to use a computer.
3. Assess actual hydraulic conditions found in sewers and generate new equations describing these.
4. Define mixing, dilution and transport of dissolved and suspended materials in sewers. Perhaps develop new methods for obtaining dynamic materials balances and for tracing pollution loads through the sewer system.
5. Develop techniques to predict likely amount and distribution for a short future period (hours) during rainfall, based on actual measurements, for real-time control.

6. Determine the tolerance of treatment systems to shock hydraulic and pollution loading, to assist in determining economic trade-off between additional sewer control and degraded plant performance.

CONCLUSION

Of course, there are many other general subject areas needing research. In addition there is need for various hardware and devices. For example, on-line on-stream sensors have been a matter of interest for some time.

However, it seems to me that until there is more widespread application of dynamic design and control of sewer systems, the hardware, devices, and sensors will remain on the shelf or inoperative in the field. The latter will not generate the need for their existence.

The conversion of knowledge-in-being to knowledge-in-use seems to be a stumbling block in the application of dynamic methods to sewers. Perhaps this matter might itself benefit from research.

DISCUSSION

L. A. Schafer:

The CATAD system is an outstanding example of a monitoring and control system. In the area of future needs, however, why is digital compatability stressed? Although this may be desirable, development of digital-type instrumentation has proven to be expensive and generally unsuccessful in the instrument industry and can be split off as a separate problem.

C. P. Blakeley:

There is a distinct need for an early-warning system that advises the waste treatment plant operator of unusual pollutants in the collection system. This may not be essential for the very large municipalities where dilution of a chemical dump or spill in the collection system negates detrimental effects on biological treatment, but in smaller systems—probably up to 50 MGD and even larger—it may be of value.

No really good sensors are available. Conductivity measurement will provide a warning if the pollutant is ionized. A sampler, activated by the alarm could provide a means to identify the nature of the pollutant while the record of conductivity provides a reasonable handle on the magnitude and volume of the spill.

H_2S analysis of the atmosphere above the lift station wetwell could indicate unusual contaminants if, under normal operation, aerobic conditions maintain at the station. Again, a sampler can be activated by the analytical device.

These devices are available and can operate unattended for extended periods of time. Their use now may help plant operators and may also influence design in the future.

Stephen P. Graef:

One of the problems in a collection system is that of obtaining flow-proportional samples on each of several interceptors leading into a wetwell. Needed is a method for estimating flow in each interceptor so that a flow-proportional composite sample can be obtained. The device must be upstream from points of recycle.

Kelly M. Peil:

An Army report, due for publication in October 1974, concerns side-by-side evaluation of various types of samplers, tested on six different classes of water. Objectives of the report were to provide methodology to compare samplers under standard conditions, and provide a basis for a customer to select a sampler best suited for his requirements. The report may also provide information for manufacturers to build a better sampler.

Russell H. Babcock:

The motivation for major manufacturers to design and produce instruments for the special conditions encountered in waste treatment facilities is not present. The market is very small. According to a report by A. D. Little in November 1966, treatment plant and equipment represents about 20% of the total expenditure for collection and treatment facilities. An article entitled "The Worst Public Works Problem" by Edward T. Thompson appearing in Fortune for December 1958 used figures from Black and Veatch to estimate that treatment plant and equipment represents 13.5% of the total expenditure. The state of the art survey concluded that 3.3% of plant cost was for instruments. This included installation which is not normally a profit center for a manufacturer. Product shipment records from the Department of Commerce show about 2% of plant cost is for instruments. Most manufacturers will agree that approximately 50% of an instrument system sale is spent on panels and their mounting, piping and wiring. This is a very low profit item normally furnished only because it is essential to a sale. These figures multiply out as follows:

20% X 2% X 50% = 0.2% of total expenditures using A. D. Little's data.

13.5% X 2%X 50% = 0.135% of total expenditures using Fortune's data.

These figures are for **process** instruments and do not include laboratory instruments or supervisory telemetry which are not part of the market that can support development of special instruments. **Conclusion**: the market is not sufficiently large to support an independent instrument program.

Harry Torno:

Would Mr. Leiser please describe the algorithm for fully automated control under CATAD–from rainfall and flow input through control actions taken?

Joseph F. Roesler:

Can you describe the storm water treatment centers? What is needed to eliminate the storm water discharge into Puget Sound? How can automation play a role here?

Mohamed Elsahragty:

In order to achieve the highest benefits from the automation of wastewater collection systems, it is very helpful to use optimization techniques, like dynamic and linear programming, to screen the alternative system operating strategies. These techniques can be used to select the real-time operating rules from the infinite number of alternatives that are technically feasible. Existing optimization models are either very expensive to use (require several hours on the largest computers commercially available) or too simple to capture the main features of the system. It is my opinion that the lack of adequate optimization models is a serious limitation to achieving the maximum benefits from the existing automated wastewater collection systems at minimum cost.

John F. Andrews:

Would you comment on the question of improving plant performance by regulating plant inflow as against accepting variable inputs and improving performance by better control of the plant?

Both authors have raised the importance of adequately considering the interface between the collection system and the treatment plant. In this connection, there are those who might leap to the conclusion that it would be highly desirable, through a combination of sewer control and balancing tanks, to obtain a constant wastewater flow rate and composition into the treatment plant. On the other hand, there are those who would concentrate entirely upon control systems for the treatment plant for handling of the "wild" or uncontrolled inputs from the collection system.

The discusser would like to point out that there may be a "best" waveform and input frequency for the inputs to wastewater treatment plants and this may be neither the "wild" nor constant input. For example, there are instances in other fields of science and engineering where cyclic inputs at a particular frequency have been found to give improved performance over constant inputs. Examples are the use of alternating instead of direct current in electrical systems, certain chemical reactors which perform best with cyclic inputs and the surface renewal theory for oxygen transfer. The possibility therefore exists that there may be a "best" waveform and input frequency for the inputs to wastewater treatment plants.

Joseph F. Roesler:

What difficulties do you face in explaining to the "City Fathers" the type of computer that must be used to accomplish the job? Would it be feasible to describe the planned system in terms of functional use, but yet in the layman's language so that the City Fathers can understand?

Jack Matson:

Has the question of cost effectiveness been studied? What are the quantifiable benefits of an automated wastewater collection system, and do they exceed the costs?

CLOSURE

Curtis P. Leiser:

Reply to L. A. Schafer: Data transmission is almost universally done in digital form. By providing all original data signals also in digital form, we bypass the need to provide, install and maintain expensive interfacing and conversion units.

Reply to R. H. Babcock: I cannot argue with the analysis. Perhaps EPA involvement in research for standardized instrumentation would offset development costs.

Mr. Torno is referred to EPA publication EPA-670/2-74-022, "Computer management of a combined sewer system," pp. 140-152.

Reply to J. F. Roesler: There currently are no overflow treatment centers in Seattle. A rotary screening facility at the King Street outfall was once proposed but rejected as too costly to operate. The EPA is currently sponsoring research on numerous overflow treatment techniques. Overflows could be eliminated by providing additional offline storage, constructing parallel interceptors at critical locations and by limiting storm inflow through surface stormwater retention practices. The computer would be very useful in measuring flow, overflow and storage rates, and controlling or recommending control actions in offline storage facilities.

Reply to J. Matson: The reference given above devotes an entire chapter to costs of automated control. Quantifiable benefits of improved water quality are obviously difficult to measure. It is easier to base such decisions on a comparison of alternatives for achieving a certain degree of overflow reduction. Comparisons from the referenced report show that the first 60-80% reduction is far less expensive using automated control.

James J. Anderson:

Reply to S. P. Graef: We have used stage-discharge relationships, taking advantage of the computer's capability to solve complex equations, to estimate flow. The equations of hydraulic flow have been well defined in the literature and can be used with good engineering judgment for practical applications.

Reply to M. Elsahragty: We have optimized a number of combined and separate sewered areas to obtain cost-effective combinations of relief sewers, storage, control, and treatment

for overflow pollution reduction. Our early modelling was very complex until we learned which parameters and considerations were significant.

Reply to J. F. Andrews: Perhaps a new "figure-of-merit" or "annual utilization rate" might be used to answer this question. The plant removal in pounds per hour could be accumulated annually and the total divided by the design removal capacity in pounds per hour times the number of hours of operation. High removals as a per cent of influent may be achieved at light loads, but the excess treatment capacity has been lost forever. It is my belief that a combination of load control and process control are required.

Reply to J. F. Roesler: At one time the word "computer" meant "automation = loss of jobs." It still has a negative meaning to a few people. By and large, however, "City Fathers" are progressive people who see the computer as another of the complex tools used in municipal administration. In my opinion, computers are more readily accepted by elected officials than by the engineering profession which is only slowly learning how to use them. There are a number of primers on computer science which could be modified for use in the water pollution control field.

Reply to J. Matson: The capital cost of an optimized automated collection system in the Cleveland Southerly District was approximately $50 million. These construction costs are the least possible to eliminate 90 per cent of combined sewer overflow over a ten-year period. The value of benefits for this reduction have not, and, in my opinion, cannot be quantified. For example, how can a value be placed on the aesthetics of a creek without raw sewage flowing through the city? The selection of the automated system was based on a tenfold reduction of overflow at a cost of about one-tenth of other standard engineering approaches.

Report of Working Party on RESEARCH NEEDS FOR AUTOMATION OF WASTEWATER COLLECTION SYSTEMS

John A. Lager
Vice President, Metcalf & Eddy, Inc., 1029 Corporation Way, Palo Alto, CA 94303
Harold Torno
Office of Research and Monitoring, Environmental Protection Agency
Washington, DC 20460

The following outline presents the problems and associated research needs on automation of wastewater collection systems as determined by the working party. A section on objectives, applicable to both combined and separate sewer systems, has been included to place the problems in perspective.

OBJECTIVES

1. Reduce or eliminate untreated overflows or bypasses.
2. Provide measurements and data logging of flow and pollution characteristics for:
   a. NPDES compliance
   b. Legal protection
   c. Normal state and federal reporting purposes
3. Minimize flooding.
4. Equalize flow and pollutant loadings arriving at the treatment facilities.
5. Improve system operation—that is, provide for the optimum utilization of the existing sewer system and its inherent hydraulic capacity in such a way that the treatment facilities are most effectively used and that overflows or bypasses are minimized.
6. Detect and monitor infiltration and/or inflow.
7. Detect system abnormalities, including stoppages and malfunctions in regulating devices or other system components, and hazardous conditions in the sewer system, such as the presence of H_2S or other gases.
8. Provide a data base for the cost-effective planning of improvements to, or extensions of, existing systems.
9. Save on costs and improve system utilization by pumping at highest efficiency, early detection of faults or malfunctions in the system, and source detection of contaminants entering the system at random times or places.

PROBLEMS

The following is a list of problems considered to be important by the working party if the stated objectives are to be met. These problems are not necessarily in priority order.

1. Equipment limitations, particularly the sensors required to meet specific needs, such as flow or load equalization: Of

primary importance are flow measurement capabilities and the necessary sensors to operate regulating devices within the sewer system. Considerable attention was directed at the conference toward the limitations of sensors. The working party believes, however, that the sensors available on the market are adequate, except for flow measurement devices, and that the primary problem is an engineering one of devising the proper equipment to convert the sensed signal at a data point to data in a central computer system.

2. Lack of understanding the impact of automation on system design and operation: Most sewer systems are designed on the basis of peak flow assumptions when, in fact, the urban runoff phenomena are highly time-variant. The uneven nature of the rainfall runoff process makes it extremely attractive to use automated systems in order to maximize flow through that system and/or to minimize the impact of pollutant discharges from overflows.
3. Inadequate rainfall forecasting: The primary problem is one of predicting on a very short-term (1- or 2-hour) basis what the impact of rainfall will be on a catchment: How intense will the rain be? From which direction will it come? In which direction will it travel as it crosses the catchment? How quickly will it abate? And what is the impact of this rainfall travel and intensity on the runoff from that catchment?
4. Lack of real-time data on the cost-effectiveness of automated control of collection systems, and hence inadequate justification of the use of an automated system: The working party believes, however, that there are opportunities for the joint automation of treatment facilities and the collection system so that these systems are jointly cost-effective. These opportunities should be given careful consideration.
5. The need to improve existing regulators and their design and, in some cases, to provide better regulators, such as a replacement for fabridams: While some work is under way in this direction (the swirl concentrator is an example), much still remains to be done on improvement of regulators and the control and sensing devices associated with them. Moreover, the effect of the imposition of controls, such as rapidly closing gates, on the physical integrity of the system has been inadequately defined. For instance, such gates can introduce hydraulic transients and water hammer conditions, or pressure conditions within the piping that could cause serious damage to the system. Better definition is also needed of the limitations on control devices that must be applied when they are installed in collection systems.
6. The general reliability of automation systems and the cost of systems related to their overall reliability has been inadequately defined. It is possible, of course, to design control and telemetry equipment that will provide performance similar to that used in submarines or missiles. However, the cost may be prohibitive and unjustified.
7. There is a general lack of standardization of regulators, hardware, computer hardware, and the programs or even the programming languages used when developing models, for operating in an automatic model wastewater collection system: The performance requirements for system components are not adequately defined, nor are system specifications available so that purchasers of computing equipment are adequately protected in case of either software or hardware failure. In this regard, it is important that there be an interface with other engineering disciplines which have already solved many of the problems in process control of systems. For example, the petroleum and textile industries run highly automated process control operations. Their engineers have largely solved many of the same problems that we will face, such as telemetry and analog-to-digital conversion devices (and their interface with small computing systems).
8. Maintenance and personnel requirements that are unique to automated wastewater collection systems are largely undefined, not only in numbers but also in the skills required when such automated systems are installed. Finally, while not a research problem, the working party believes that state and federal organizations should better define the standards on combined sewer overflows and stormwater discharges, so that those who must design collection systems to deal with pollution abatement from these sources know what their objectives are and have something on which to base valid cost comparisons.

PRIORITY NEEDS

The following needs have been ranked in priority sequence as determined within the working party through open discussion and critique.

1. A determination should be made of the relative balance between the benefits to be accrued from the automation of the collection system and from treatment facilities improvements (automation of treatment facility or some other upgrading). To do this, some definition of overflow standards will have to be considered in terms of their ultimate impact on receiving water quality.
2. A set of uniform standards and guidelines for instrumentation and sensors must be established. In this regard, the standards developed, particularly for sensors, should be directed toward operation and performance, and not toward technical details on how a piece of equipment is to be manufactured. An excellent example is the publication "Specifications for an Integrated Water Quality Data Acquisition System," (Eighth Edition, January 1968) developed by the Instrumentation Development Branch, Methods Development and Quality Assurance Research Laboratory, USEPA, National Environmental Research Center, Cincinnati, Ohio. Computer standards should include a language specification.
3. The demonstration, on some existing wastewater systems, of the integration between collection system automation

and plant performance in a plant that is at least partially controlled by the same computer system as the collection system, is needed. Present opportunities for doing this exist in Seattle, and future opportunities will be available in Cleveland, San Francisco, Detroit, and perhaps Philadelphia.

4. Operating strategies must be defined for a variety of automated systems, considering both the system as a whole and the responses of the existing treatment facilities to the varying loads that could be expected in the treatment of combined sewer overflows. These strategies should reflect the difficulty of operating a large-scale model on a small process computer. One such strategy is now being developed by Colorado State University for the City of San Francisco and should be considered.
5. The range of system sizes or characteristics that lend themselves to automation of the collection system needs to be identified. Obviously, some systems are too small to warrant automation and others have a physical makeup that is unsuitable for automation. Also, the software, in the form of simplified models to drive the control systems, needs to be developed. Such models as the EPA stormwater management model are much too complicated and require too much computing power to be useful as control models.
6. There should be a determination whether the equalization of flow or pollutant loading is a valid objective in separate sanitary sewer systems that may become overloaded by virtue of infiltration or inflow, or by inadequate capacities.
7. The effects on various wastewaters of in-system storage for a range of time periods must be determined. For instance, hydrogen sulfide production, solids deposition and resuspension, odors, and the possibility of slug loadings and their influence on the treatment facilities, should be studied for both combined and separate sanitary wastewaters.
8. Existing combined sewer regulators should be further evaluated with a view toward automation. Research in improving these existing regulators and also in the development of new regulators, such as a replacement for the fabridam, needs to be accomplished. The fabridam, in spite of its simplicity, places in the system some undesirable hydraulic characteristics and is not totally amenable to automatic control (it is very difficult to determine the actual level of the fabridam crest).
9. Improved rainfall prediction or projection techniques (anticipatory modeling) must be developed. The use of radar as a predictive device for short-term pattern and direction-of-rainfall relationships should be investigated.
10. A vigorous technology transfer program in the combined-sewer area and opportunities for programmed collection system control should be stressed. As a result of the past seven years of the combined-sewer research program, much technology has been developed which needs dissemination in the same way that treatment process technology is broadcast to the profession by the Technology Transfer group.

AUTOMATION OF BIOLOGICAL TREATMENT PROCESSES

Workshop on Research Needs
Automation of Wastewater Treatment Systems

Preceding page blank

DYNAMICS AND CONTROL OF BIOLOGICAL TREATMENT PROCESSES

John F. Andrews
Environmental Systems Engineering, Clemson University, Clemson, SC 29631

INTRODUCTION

The need for consideration of dynamic behavior in both the design and operation of biological processes used for wastewater treatment is frequently greater than that for industrial processes because of the large temporal variations which occur in wastewater composition, concentration, and flow rate. However, our understanding of this dynamic behavior and how it may be modified through the application of modern control systems is in its infancy. Gross process failures are all too frequent and even when these are avoided, it is not unusual to find significant variations in process efficiency, not only from one plant to another but also from day-to-day and hour-to-hour in the same plant.

Dynamic mathematical models are usually necessary for the description of time-variant phenomena, as commonly encountered in biological processes, and increasing efforts are being devoted to their development. The models usually consist of sets of non-linear differential equations for which analytical solutions are not available and this is one of the major reasons why the dynamic behavior of biological processes has not been adequately considered in past years. Being practical people, most environmental engineers have said "Why develop a dynamic mathematical model when it is not possible to obtain a solution?" However, computer simulation has largely eliminated this bottleneck and the current problem is not so much one of being able to obtain a solution as it is to insure that the model adequately describes the dynamic behavior of the process being simulated.

When the dynamic behavior of a plant has been defined, the environmental engineer then should become interested in modifying this behavior so that it will conform to some desired behavior. As illustrated in Figure 1, this can be accomplished through both process design and the incorporation of control systems. When the characteristics of the plant to be controlled are fixed, as for existing plants, the improvements which can be obtained may be limited, frequently because of a lack of flexibility in the plant design. However, in the design of a new plant it is possible to strike a better balance between the effort and expense devoted to the plant and that devoted to the control system. The major point of significance is that both the control system and the controlled plant affect the plant outputs and the two should therefore be designed as an integrated system.

A literature review of present practice and current research on the dynamics and control of all biological processes is not possible within the space constraints of this paper and attention will therefore be devoted to only the two more common processes used in the U. S., these being the activated sludge process and anaerobic digestion.

ACTIVATED SLUDGE PROCESS

The activated sludge process is the most commonly used process for the treatment of wastewaters and consists of two units, an aeration basin and a sedimentation basin. The three major inputs to the aeration basin are the wastewater, concentrated activated sludge from the sedimentation basin, and air. The microorganisms in the activated sludge react with the organic pollutants in the wastewater and oxygen in the air to produce more activated sludge, carbon dioxide, and water. The effluent from the aeration basin flows to the sedimentation basin where the activated sludge is separated from the liquid phase. The process effluent consists of the clarified overflow from the sedimentation basin. This basin also serves to concentrate the solids which settle to the bottom of the tank for recycle to the aeration tank.

The recycle of concentrated sludge from the sedimentation basin to the aeration basin is an essential feature of the process. Recycle serves the purpose of both increasing the concentration of microorganisms in the aerator and maintaining the organisms in a physiological condition such that they will readily flocculate. However, recycle has also resulted in difficulties in understanding and modeling the process since it

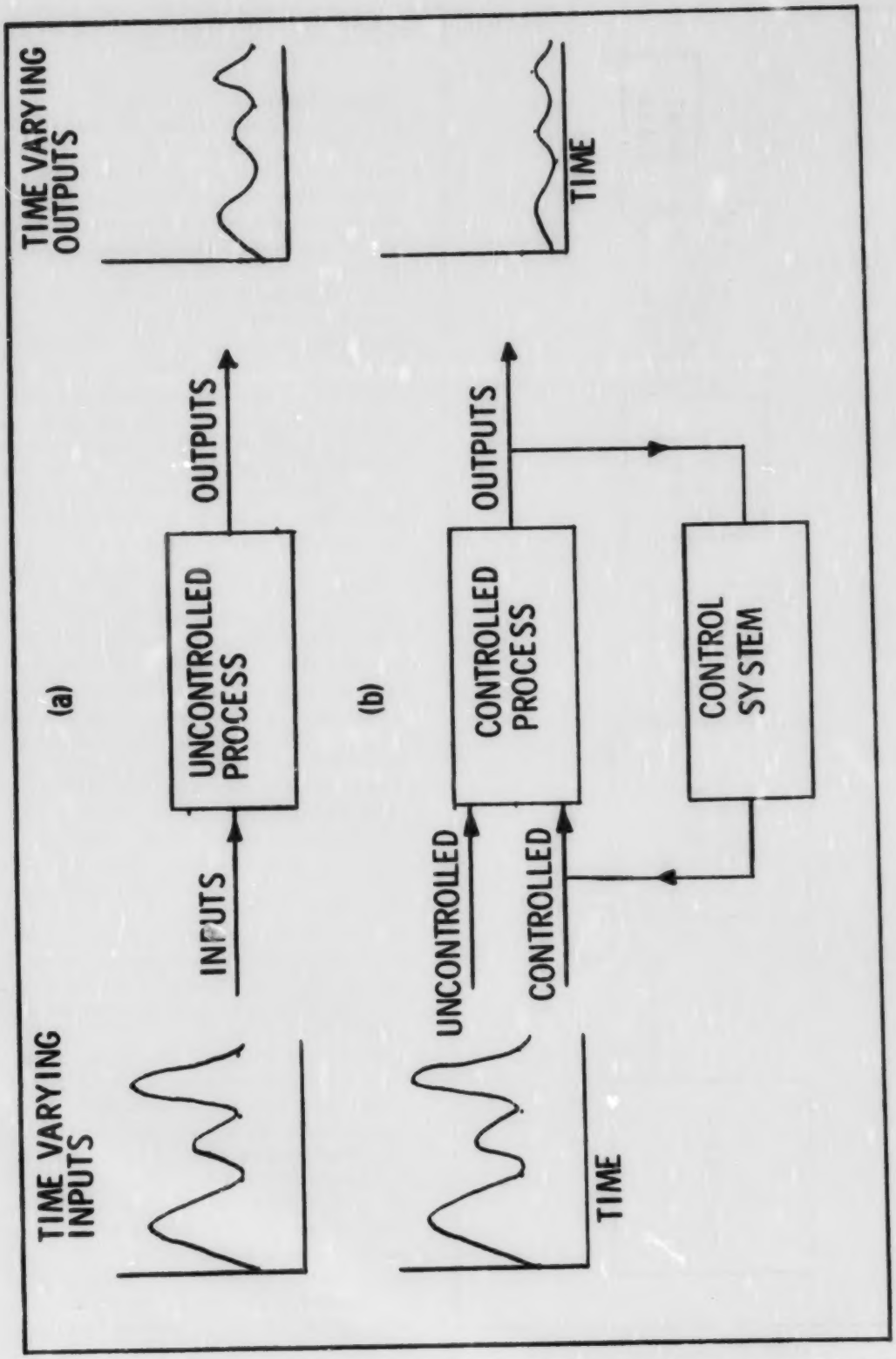

Figure 1. Time-varying Inputs and Outputs for Controlled & Uncontrolled Process

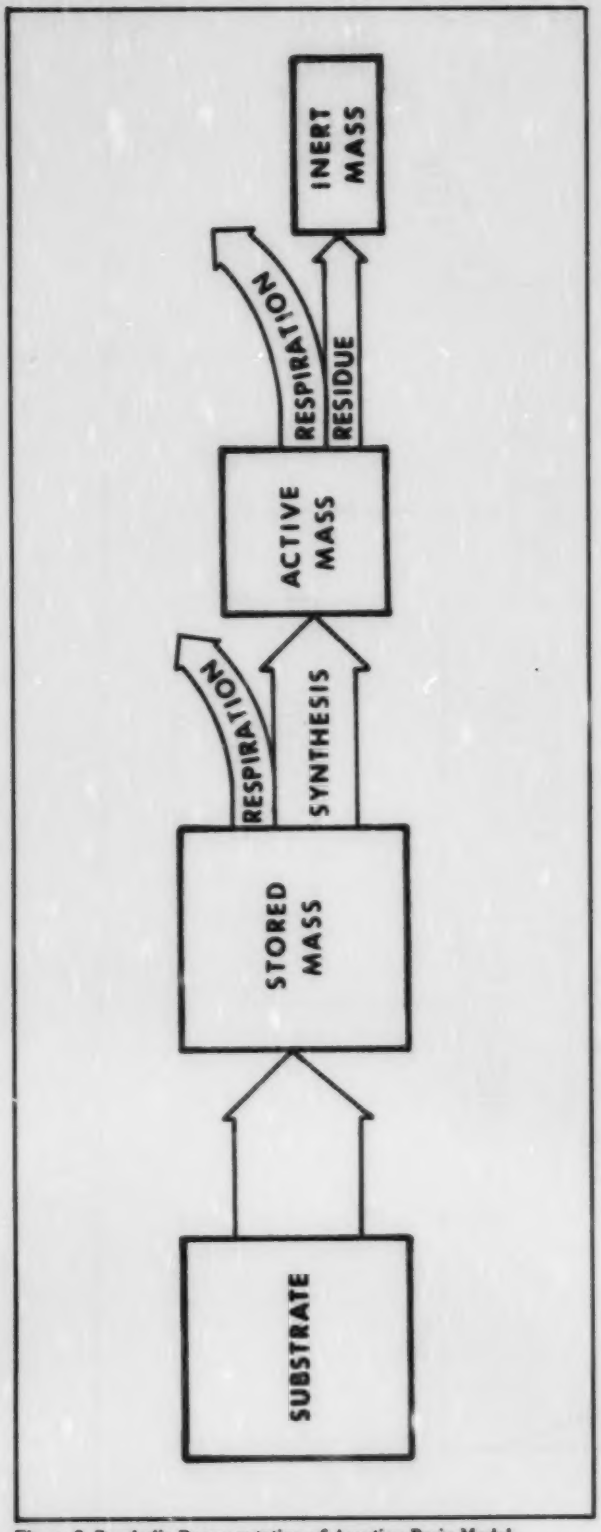

Figure 2. Symbolic Representation of Aeration Basin Model

creates a feedback loop thereby causing a strong interaction between the aerator and settler.

Dynamic Model

The latest dynamic model developed for the process is that of Busby and Andrews (1). In addition to the aeration basin and secondary sedimentation basin, a dynamic model of the primary sedimentation basin as developed by Bryant (2) is also included for appropriate modification of the characteristics of the raw wastewater prior to its passage to the activated sludge process.

In developing the model for the aeration basin, the sludge mass is considered to be structured into three components, these being stored, active, and inert mass as illustrated in Figure 2. Removal of pollutants is considered to occur stagewise in three steps with the first step being a rapid transfer of pollutants from the wastewater to the floc. This first step is assumed to be a physical phenomenon with the removed pollutants being "stored" in the sludge. The pollutants are then metabolized to give an "active mass" which is further degraded, through organism decay, to an "inert mass." The relative rates of the three steps are:

$$\text{Step 1} \gg \text{Step 2} \gg \text{Step 3}$$

Inclusion of structure in the model and consideration of the stepwise removal of pollutants permits the model to describe a wide spectrum of activated sludge process variations. For example, step 3 would be the controlling factor in the extended aeration process whereas step 1 would control in the contact basin of the contact stabilization process. Furthermore, the removal of pollutants in the contact basin would also be dependent upon adequate metabolism of the "stored" material in the stabilization basin. This is illustrated by the simulations presented in Figure 3 where sludges with different initial concentrations of "stored mass" are placed in contact with fresh substrate. Sludge which had been held in the stabilization basin for a sufficient length of time would have metabolized the majority of its stored mass and would therefore show a very rapid uptake rate whereas sludge which had not been stabilized sufficiently would show a low uptake rate. This effect is obtained by making the substrate uptake rate a function of the degree of saturation of the sludge with stored mass.

In order to adequately describe the dynamic behavior of the process, it is necessary to couple the dynamic model of the aeration basin with a dynamic model of the secondary settler because of the strong interactions between the two units. As an example of these interactions, the concentration of sludge in the recycle flow is dependent upon, among other factors, the settling characteristics of the sludge, physical size and other characteristics of the separator, temperature, recycle rate, and the solids flux to the separator. A change in the recycle flow rate, therefore, results in a different sludge concentration in the recycle flow and thus a difference in the sludge concentration in the aeration basin. This may result in a

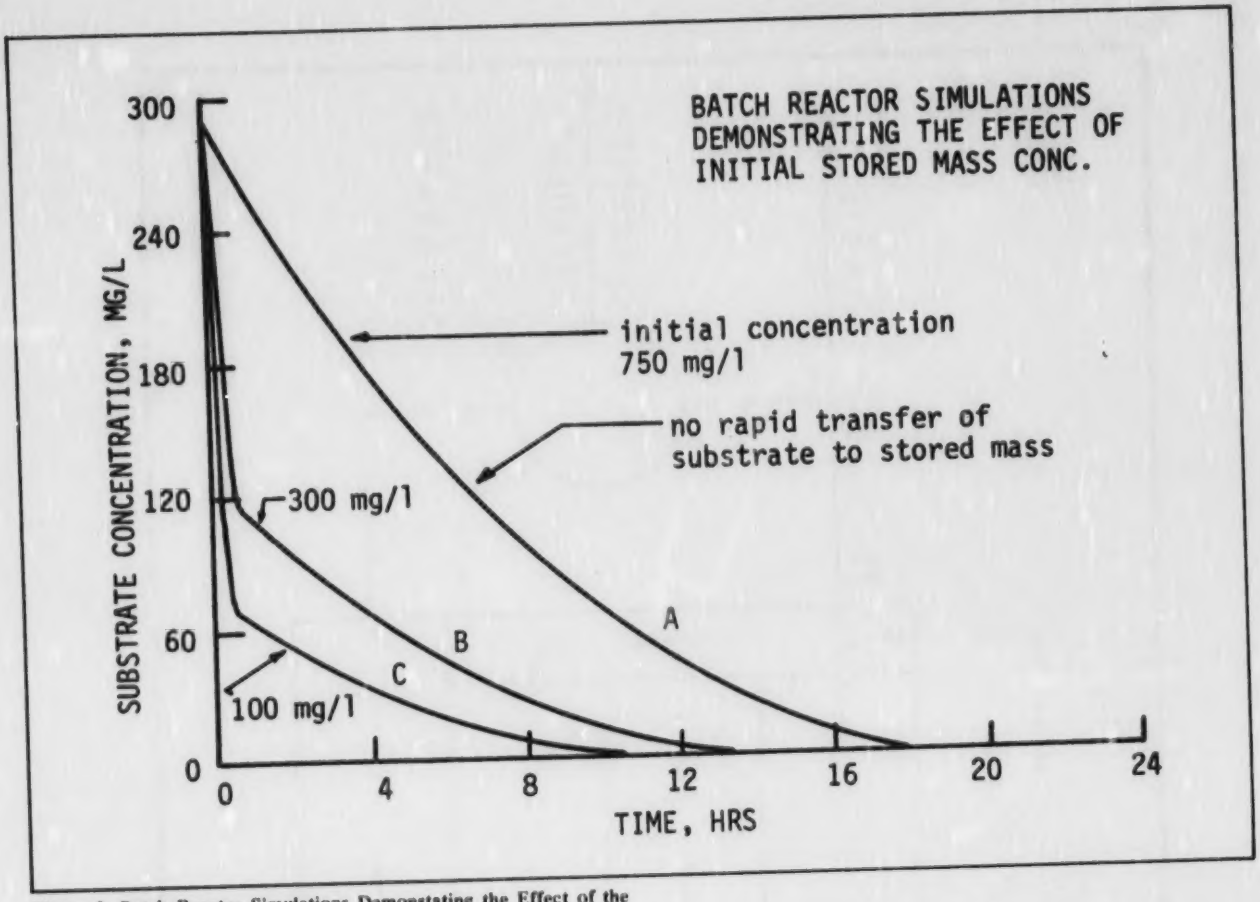

Figure 3. Batch Reactor Simulations Demonstating the Effect of the Initial Stored Mass Concentration

change in the settling characteristics of the sludge since these are dependent upon, among other factors, the specific growth rate of the sludge which is a function of the sludge concentration in the aeration basin. The relative proportions of stored, active, and inert mass may also change if there are substantial changes in the specific growth rate.

Bryant (2) was the first to develop a dynamic model of the secondary settler to express the above interactions on a quantitative basis. He also incorporated in his model an expression presented by Pflanz (3) for prediction of the suspended solids in the settler effluent as a function of the solids flux for the settler. A modificatioof Bryant's model has been incorporated in the process model developed by Busby and Andrews (1).

Control Strategies

In the conventional activated sludge process, the operator has a relatively limited choice of control actions, these being: (1) air flow rate, (2) sludge recycle flow rate, and (3) sludge wasting rate. Of these, air flow rate is primarily of importance in controlling process economics and does not appear to have much effect on process efficiency as long as the dissolved oxygen in the reactor remains above some minimum level. Exceptions to this may be encountered in the control of filamentous organism growth and the use of high purity oxygen in lieu of air. Common strategies for the control of air flow rate include the regulation of the air flow rate in proportion to the wastewater flow rate or the regulation of air flow to maintain a constant dissolved oxygen concentration in the aeration basin.

Variation of the sludge recycle flow rate in proportion to the wastewater flow rate is also a common control strategy. However, this is not always successful, especially when poorly settling sludges are encountered, since it does not take into account possible changes in the concentration of sludge in the recycle flow. An increase in the return sludge flow rate can, within limits, increase the mass of sludge in the aeration basin; however, it also increases the solids loading to the secondary settler as well as creating additional turbulence in the settler and can sometimes result in an increased carryover of solids in the process effluent.

There is a net growth of sludge in the activated sludge

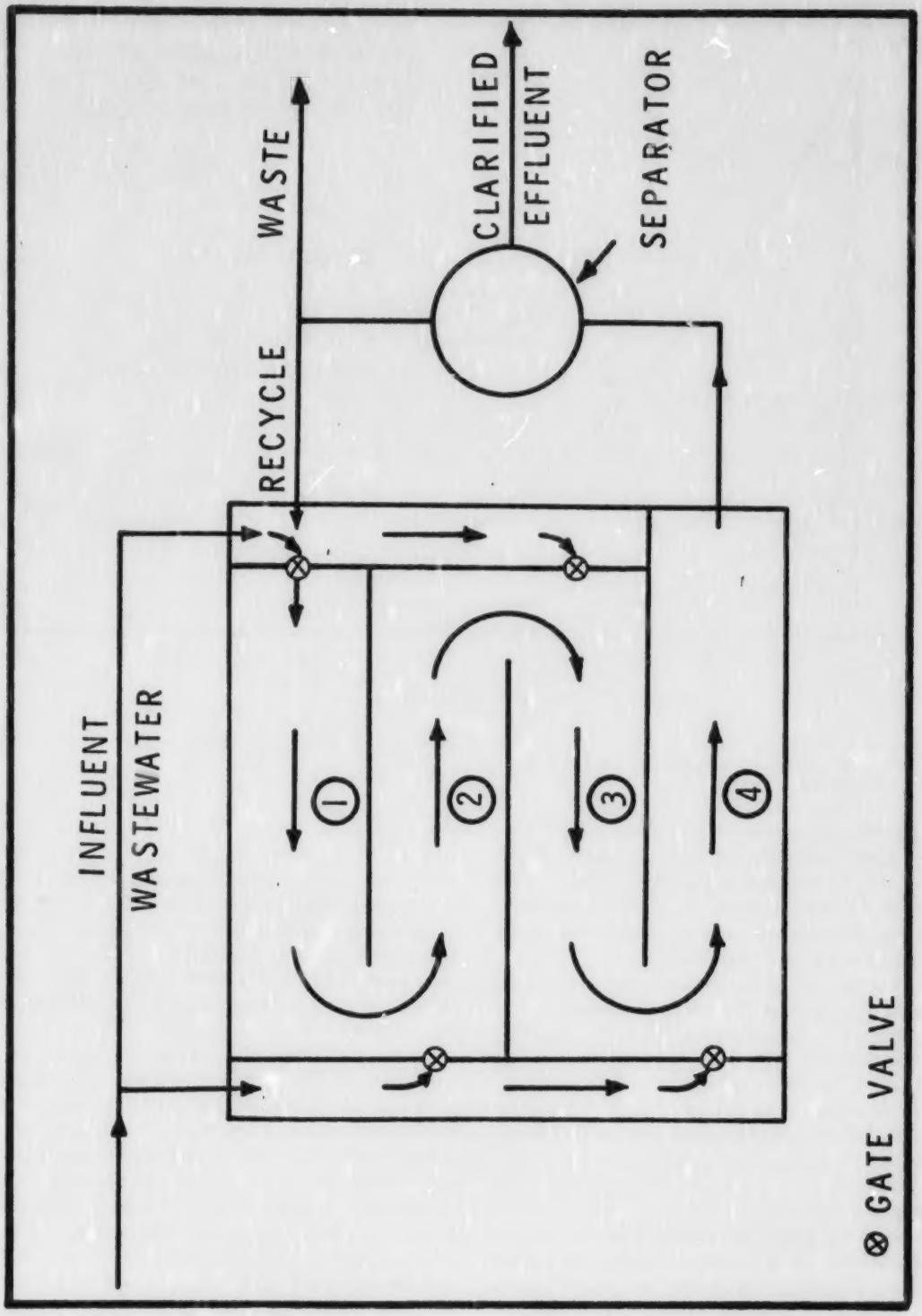

Figure 4. Step Feed Process

process and sludge must therefore be intermittently or continuously wasted from the system. One control strategy is to waste that amount of sludge each day which will maintain a constant mass of sludge in the aeration basin; another is to waste sludge whenever the sludge blanket level in the settler exceeds a certain depth. Sludge wasting may also be used when poorly settling or bulking sludge is encountered in order to prevent the sludge blanket level from rising in the separator until sludge is discharged in the effluent. However, on a long-term basis this may be the wrong control action, since, if the bulking is due to an overload of organic materials, as is frequently the case, sludge wasting will decrease the amount of sludge in the reactor thus resulting in still further overloading with possible process failure.

Two or more of the above mentioned control actions may be combined and an example of this has been given by Brouzes (4) in which he controlled sludge wasting to maintain a constant specific growth rate of the sludge. Using a special-purpose analog computer, he regulated and measured the air flow rate required to maintain a constant dissolved oxygen concentration in the aeration basin. Assuming a constant oxygen transfer efficiency, the computer then calculated the oxygen uptake rate and related this, using empirical coefficients, to the sludge production rate. The computer then calculated and controlled the rate of sludge wasting to maintain a constant specific growth rate of the sludge. A safety override control was provided to actuate sludge wasting whenever the sludge blanket level exceeded a certain depth in the settler.

The step feed activated sludge process (Fig. 4) permits a fourth control action to be taken, this being the ability to regulate the points at which wastewater is added along the length of the aeration basin. The basin is usually constructed in the "folded" fashion shown for economy of construction. This control action is especially effective for poorly settling or bulking sludge which can lead to process failure by loss of the activated sludge in the overflow from the sedimentation basin. Andrews and Lee (5) have illustrated the value of step feed as a control action by computer simulation using a simplified dynamic model. Figure 5 shows the transient effect of suddenly shifting from an operational mode where all of the wastewater is admitted to stage one (see Fig. 4) to an operational mode where all of the wastewater is equally divided between stages two and three. The sludge in the settler is rapidly transferred to the aerator and there is also a rapid decrease in the solids flux to the settler. Both of these responses would have the short-term effect (hours) of decreasing the mass of solids carried over in the effluent from the settler. These predictions are qualitatively verified through the field studies reported by Torpey (6) in his work on the step feed process at the Bowery Bay plant in New York City. Torpey also demonstrated that there was a long-term (days) improvement in the settling characteristics by application of this control action.

The increasing use of high-purity oxygen processes in the U. S., coupled with the increased installation of computers in wastewater treatment plants, offers the possibility of control from a variable more fundamental than any now in common use. This is the specific oxygen utilization rate which is expressed as mass of oxygen utilized per unit of time per mass of sludge in the aeration basin. This is a direct indicator of the "activity" of the microorganisms in the aeration basin. It could be calculated on a continuous basis from oxygen and solids balances on the aerator. The oxygen balance would be relatively easy to perform for the closed type of high purity oxygen processes since these are, in effect, on-line respirometers.

ANAEROBIC DIGESTION

The anaerobic digestion process is widely used for the treatment of organic sludges from municipal wastewater treatment plants. The process has several significant advantages over other methods of waste treatment and among these are the formation of useful by-products such as methane gas and a humus-like slurry well suited for land reclamation. Unfortunately, even with these advantages the process has in general not enjoyed a good reputation because of its poor record with respect to process stability as indicated through the years by the many reports of "sour" or failing digesters. The major problems with the process appear to lie in the area of process operation as evidenced by its more successful performance in large cities where there is less variation in the influent sludge and skilled operation is more prevalent. At the present time, operating practice consists only of sets of empirical rules and there is a significant need for a rational control strategy to put process operation on a quantitative basis.

Dynamic Model

The present dynamic model of the process has evolved over the past ten years and is discussed in more detail in the publications of Andrews (7, 8), Andrews and Graef (9), and Graef and Andrews (10, 11). The model, summarized in Figure 6, was developed from material balances on the biological, liquid, and gas phases of a continuous-flow, complete-mixing reactor. The components on which material balances are made are given below:

Biological Phase

1. Organisms

Liquid Phase

1. Volatile acids.
2. Conservative toxic agent.
3. Cations.
4. Bicarbonate.
5. Dissolved carbon dioxide.
6. Methane.

Gas Phase

1. Carbon dioxide.
2. Methane.

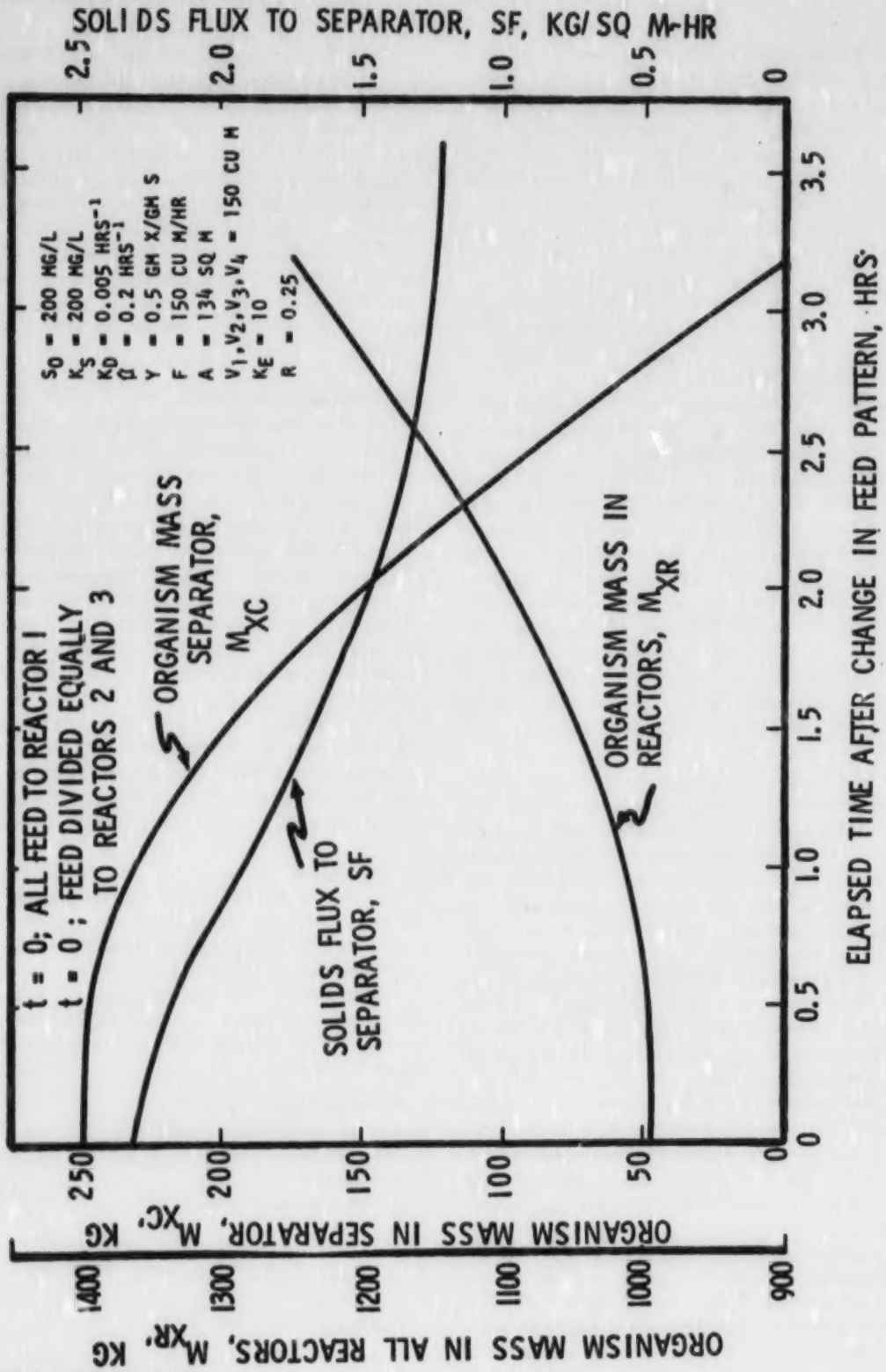

Figure 5. Process Control by Step Feed

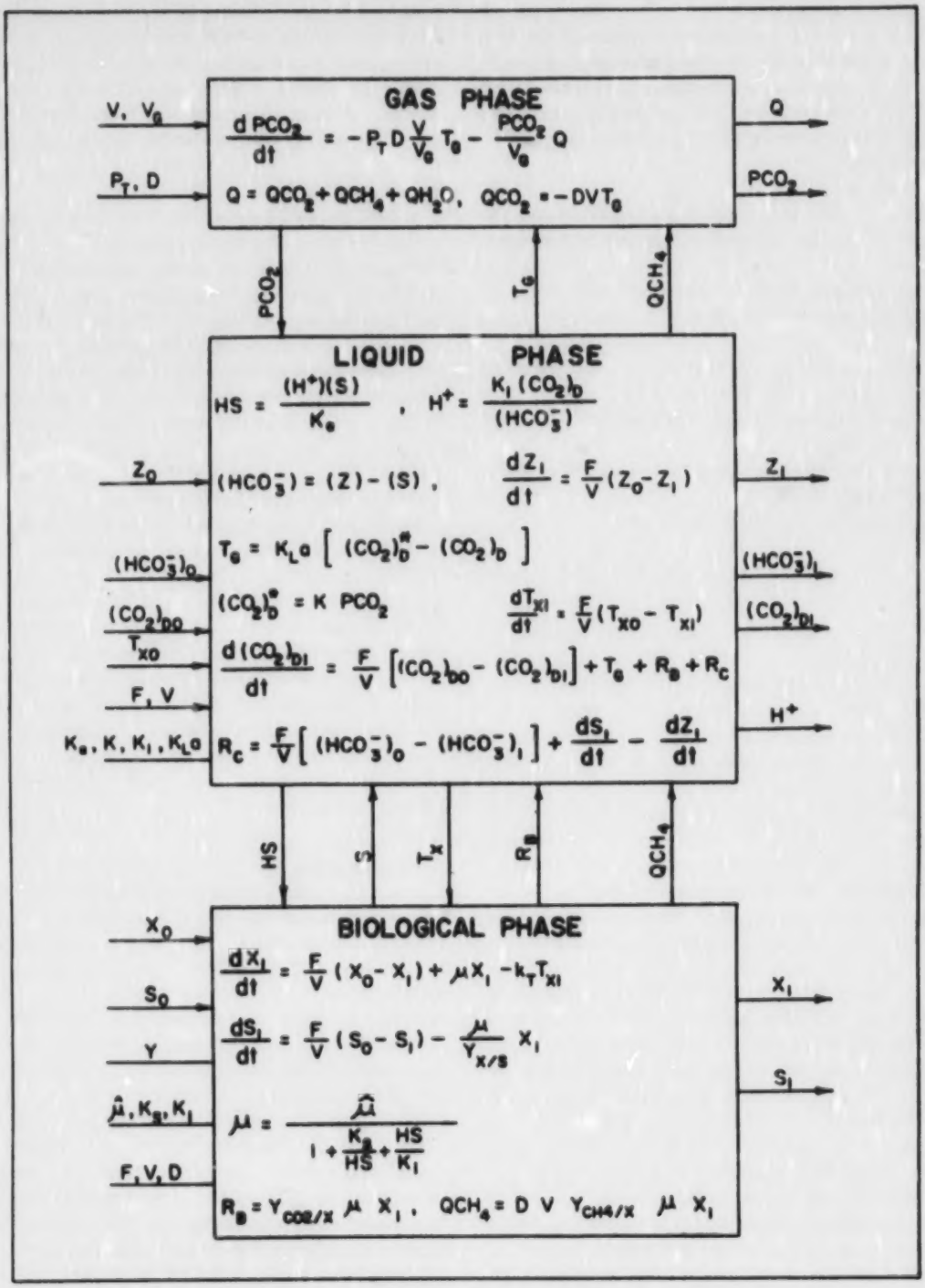

Figure 6. Summary of Mathematical Model and Information Flow

There are strong interactions between the phases as well as internal to each phase. These interactions must be considered if the model is to predict the dynamic response of the five variables most commonly used for predicting process condition which are: (1) Volatile acids concentration; (2) alkalinity; (3) pH; (4) gas flow rate; and (5) gas composition. The following relationships were used to express these interactions on a quantitative basis:

1. Yield coefficients.
   a. Moles organisms produced/mole volatile acid utilized.
   b. Moles carbon dioxide produced/mole organisms produced.
   c. Moles methane produced/mole organisms produced.
2. Kinetics of organism death due to a conservative toxic agent.
3. Inhibition function for relationship between organism growth rate and un-ionized acid concentration.
4. Equilibrium relationship between ionized acid, un-ionized acid and pH.
5. Equilibrium relationship between dissolved carbon dioxide, bicarbonate and pH.
6. Charge balance on ionic species in solution.
7. Henry's law.
8. Mass transfer equation for transfer of carbon dioxide across the gas-liquid interface.

The model has been kept as simple as possible by considering the conversion of volatile acids to methane and carbon dioxide as the rate limiting step. It is also assumed that there is no lag phase, endogenous respiration, or inhibition by-products. The model is also restricted to a pH range of 6 to 8 and does not consider the precipitation or dissolution of solid chemical phases such as calcium carbonate.

Two key features of the model are the use of an inhibition function in lieu of the Monod function to relate volatile acids concentration and specific growth rate for the methane bacteria and consideration of the un-ionized fraction of the volatile acids as both the growth limiting substrate and inhibiting agent. The use of an inhibition function is an important modification since it enables the model to predict process failure by high concentrations of volatile acids at residence times exceeding the washout residence time. Consideration of the un-ionized fraction of the volatile acids as the inhibiting agent resolves the conflict which has existed in the literature as to whether inhibition is caused by high volatile acids concentration or low pH. Since the concentration of un-ionized acids is a function of both total volatile acids concentration and pH, both are therefore of importance.

Digital computer simulation studies provide qualitative evidence for the validity of the model by predicting results which have been commonly observed in the field. Among the results predicted by the model are: (1) At steady state, an increase in the alkalinity concentration in the digester results in an increase in the operational levels of pH and volatile acids; (2) failure of the process can occur through hydraulic, organic, and toxic material overloading; (3) the course of failure, as evidenced by the behavior of the operational variables, pH, alkalinity (HCO_3^-), volatile acids concentration (S), and gas composition is qualitatively the same as that observed in the field; (4) stopping or reducing the flow to the reactor, the addition of base, or recycle of sludge from a second-stage reactor are effective techniques for curing failing digesters.

Process Stability

Hybrid computer simulations were used to analyze process stability by simulating digester overloading and observing what changes in design and operational characteristics provided the best buffer against process failure. The analysis procedure involved making a change in a digester parameter, such as increasing the residence time (θ), followed by simulating larger and larger step increases in digester loading until failure occurred. By plotting the locus of points of critical substrate loading rates vs. reactor residence time or other parameter, it was possible to obtain a semiquantitative measure of digester stability. An example of a stability analysis for the effects of residence time and alkalinity is given in Figure 7.

In addition to the increases in stability which are obtained by increases in residence time or alkalinity, stability also increases sharply with an increase in the concentration of methane bacteria in the digester. This increased concentration can be attained by increasing the influent substrate concentration (sludge thickening) or by recycle of concentrated digested sludge from a second stage. It is significant that three of the measures for improving stability, increased residence time, alkalinity, and influent substrate concentration, can be attained by sludge thickening. Other simulations indicated that process stability could be enhanced by the incorporation of suitable control systems.

Control Strategies

Operating practice for the anaerobic digester consists primarily of manual procedures, with notable exceptions being closed-loop temperature control and the use of density control on the feed sludge. However, an outstanding step toward automation of these manual procedures is the near-real-time computer control system developed by Philadelphia (12). This system uses a remote terminal as an interface between the plant operator and the computer. The operator inputs his data into the terminal and the computer then reacts to the input data using the internal program of empirical and theoretical algorithms and the previous data inputs to determine the new operating conditions. Sludge charging rates, mixing requirements, etc., are printed out at the terminal and the operator then implements these instructions. This near-real-time control represents a valuable first step toward automation.

Using the dynamic model previously described with simulation by the hybrid computer, Graef and Andrews (10, 11) have explored a variety of control signals, controller modes, and control actions for the anaerobic digester. The simulations

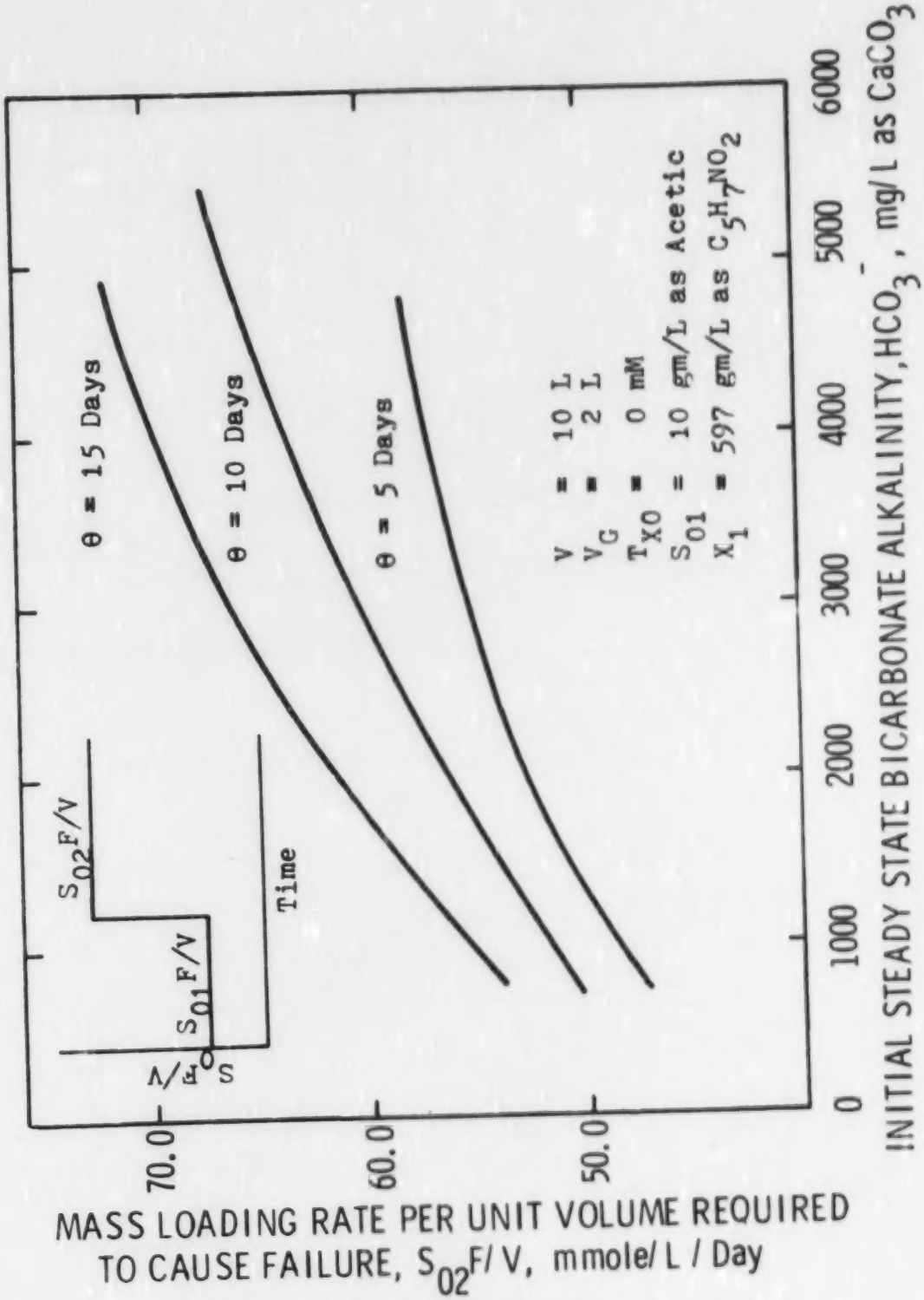

Figure 7. Process Stability as Function of Alkalinity (HCO_3^-) and Residence Time (θ) for Organic Overloading

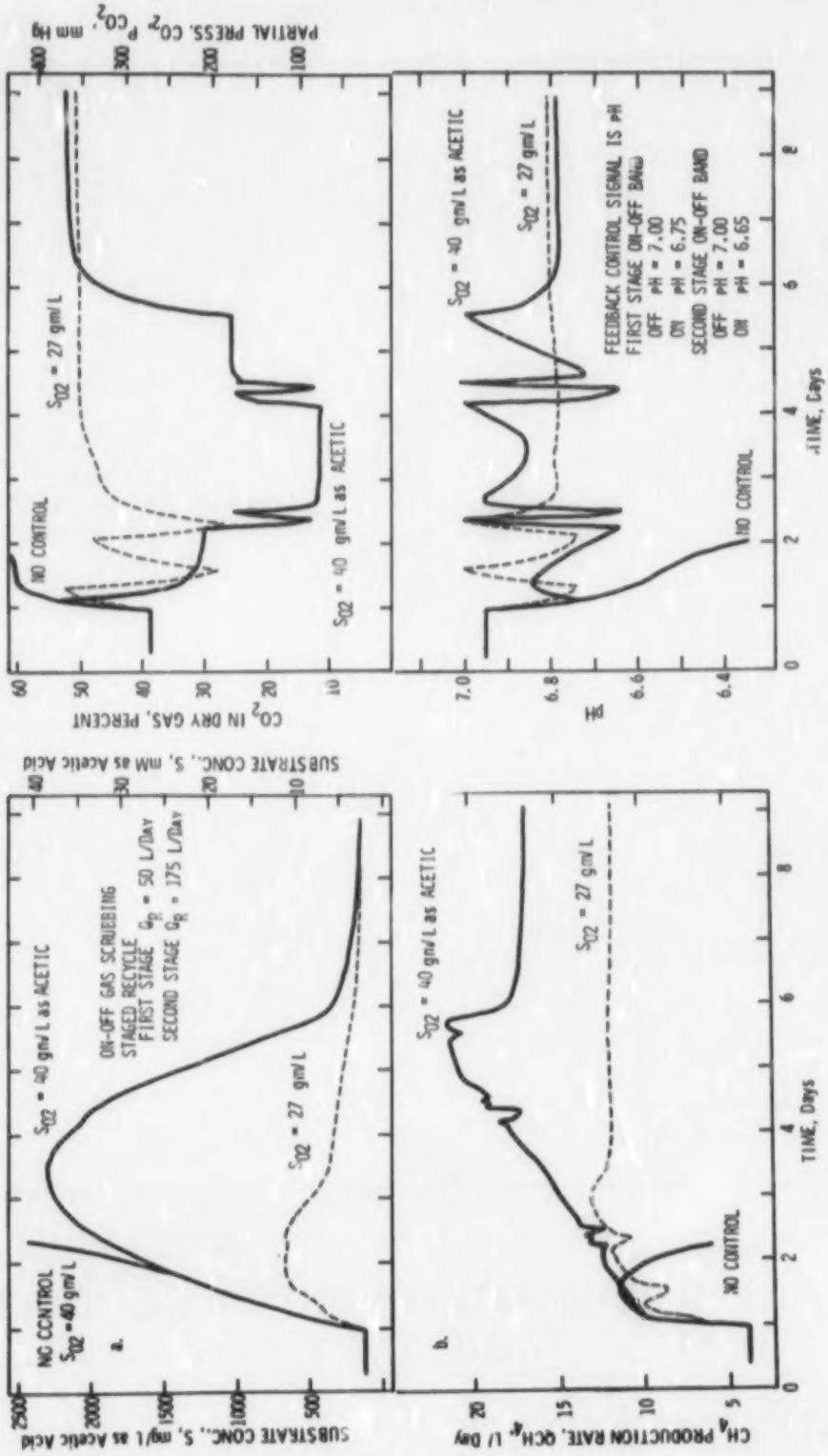

Figure 8. Controlled Response of S_1, QCH_4, % CO_2 and pH for On-Off Gas Scrubbing Control of Organic Overload

indicated that the most effective control strategy was directly dependent on the type of overloading. The recycle of gas from which carbon dioxide has been scrubbed, a new control action proposed as a result of this research, and base addition, both using pH as the feedback signal, were best suited for the correction of organic overloading. The simulated response of a digester to this control action is presented in Figure 8. A simple on-off controller mode was used and the dashed lines indicate the controlled response to a step forcing in influent substrate concentration insufficient to cause process failure, while the solid lines indicate the response to a step forcing which would cause failure.

Failure by an overload of toxic materials was best prevented by the recycle of concentrated sludge from a second stage using the rate of methane production as a feedback signal. Although the control action proposed is not new, having first been proposed by Buswell (13) in the 1930's, the proposed control signal, rate of methane production, is new and should be one of the best indicators of digester condition with respect to overloading with toxic materials. The rate of methane production can be easily calculated from the common measurements of flow rate and composition of the gas phase and would be an excellent indicator of the activity of the methane bacteria which are the most sensitive and critical organisms in the digester. An analogue can be drawn between the use of the rate of methane production as an activity indicator in the anaerobic digestion process and the use of oxygen utilization rate as a measure of microbial activity in the activated sludge process.

RESEARCH NEEDS

The dynamic models, process stability characteristics, and control strategies summarized herein are by no means complete and still require further development. Some additional factors which should be incorporated into the models are as follows:

Activated Sludge Process

1. An improved procedure for predicting the concentration of suspended solids in the effluent from the secondary settler. An important fraction of the effluent BOD is due to these suspended solids.
2. Establishment of a quantitative relationship between the settling characteristics of activated sludge and the process parameters. At present only an empirical relationship between interface settling velocity and sludge age is available and there is some doubt as to the validity of this relationship.

Anaerobic Digestion

1. Incorporation of the effects of changes in temperature into the dynamic model. The process has a reputation of being unstable with respect to sudden changes in temperatures; however, this has not been expressed on a quantitative basis. Process stability with respect to temperature changes would be of special importance for the thermophilic version of anaerobic digestion.
2. Establishment of a quantitative relationship between the solids-liquid separation characteristics of the digested sludge and the process parameters. This is of importance in connection with vacuum filtration or centrifugation. Also of importance in this respect would be the establishment of a quantitative relationship between the quality of the supernatant, filtrate, or centrate and the process parameters.

In addition to the above specific research needs, it should also be mentioned that the dynamic models, process stability characteristics, and control strategies summarized herein have only been validated by simple laboratory experiments, literature searches, and discussion with knowledgeable operations engineers. This is, at best, only semi-quantitative validation (responses are in the right direction and right order of magnitude) and both pilot and full-scale field experimentation will be needed for quantitative validation. In this respect, it should be emphasized that models are evolutionary in nature and will change as more knowledge is gained about the process. A model which is quite adequate as a first approximation may be replaced at a later date by a more exact model with better estimates of the coefficients, fewer empirical relationships, and inclusion of more variables. This evolutionary nature of models is not always recognized and can lead to reluctance on the part of an investigator to either modify or discard a model in the same fashion that investigators in past years have sometimes been reluctant to modify or discard verbal hypotheses.

Still another very significant research need is the combination of dynamic models for the individual processes into an overall dynamic model for a wastewater treatment plant with subsequent use of the model to explore computer-compatible control strategies for the plant. A preliminary effort in this direction is the work of Bryant (2) who coupled dynamic models of the primary settler, aeration basin, secondary settler, and chlorine contact basin. Such a model, after appropriate validation, could then be used to explore interactions between the individual processes with the ultimate objective of establishing an optimal control strategy for the plant. The author has been working toward this objective for the past six years.

ABBREVIATED GLOSSARY

A	concentration of anions other than HCO_3^-, $CO_3^=$, S^- and OH
C	concentration of cations other than the hydrogen ion
F	liquid flow rate to reactor
HS	un-ionized substrate concentration
Q	total dry gas flow rate from reactor
S	total substrate concentration
S^-	ionized substrate concentration
T_X	concentration of conservative toxic chemical agent
V	reactor liquid volume
V_G	volume of gas space in reactor
X	organism concentration
Z	net cation concentration
θ	hydraulic residence time

REFERENCES

1. Busby, J. B. and Andrews, J. F., "Dynamic Modeling and Control Strategies for the Activated Sludge Process," *Jour. Water Poll. Control Fed.* (In Press).
2. Bryant, J. O., Jr., "Continuous Time Simulation of the Conventional Activated Sludge Wastewater Renovation System," Ph.D. Dissertation, Clemson University, Clemson, SC (1972).
3. Pflanz, P., "Performance of (Activated Sludge) Secondary Sedimentation Basins," *Advances in Water Pollution Research* (Jenkins, S. H., ed.), Pergamon Press, New York (1969).
4. Brouzes, P., "Automated Activated Sludge Plants with Respiratory Metabolism Control," *Advances in Water Pollution Research* (Jenkins, S. H., ed.), Pergamon Press, New York (1969).
5. Andrews, J. F. and Lee, C. R., "Dynamics and Control of a Multi-Stage Biological Process," *Proc. Ivth Intern. Fermentation Symp.* (Terui, G., ed.), Society of Fermentation Technology, Japan, Yamada-Kami, Suita-shi, Osaka, Japan (1972).
6. Torpey, W. N., "Practical Results of Step Aeration," *Sew. Works Jour., 20,* 781 (1948).
7. Andrews, J. F., "A Mathematical Model for the Continuous Culture of Microorganisms Utilizing Inhibitory Substrates," *Biotechnol. Bioeng., 10,* 707 (1968).
8. Andrews, J. F., "Dynamic Model of the Anaerobic Digestion Process," *Jour. San. Eng. Div., Proc. Amer. Soc. Civil Engr., 95,* SA1, 95 (1969).
9. Andrews, J. F. and Graef, S. P., "Dynamic Modeling and Simulation of the Anaerobic Digestion Process," *Anaerobic Biological Treatment Processes, Advan. Chem. Ser., No. 105,* American Chemical Society, Washington, DC (1971).
10. Graef, S. P. and Andrews, J. F., "Mathematical Modeling and Control of Anaerobic Digestion," *Water-1973* (Bennett, G. F., ed.), *AIChE Symp. Ser.* 70, No. 136, 101 (1974).
11. Graef, S. P. and Andrews, J. G., "Stability and Control of Anaerobic Digestion," *Jour. Water Poll. Control Fed.,* 46, 666 (1974).
12. Guarino, C. F., Gilman, H. D., Nelson, M. D. and Koch, C. M., "Computer Control of Wastewater Treatment," *Jour. Water Poll. Control Fed., 44,* 1718 (1972).
13. Buswell, A. M., "Septic tank to controlled digestion," *Biological Treatment of Sewage and Industrial Wastes,* Vol. II. (McCabe, J. and Eckenfelder, W. W., eds.), Reinhold Publ. Co., New York (1958).

AUTOMATION OF THE ACTIVATED SLUDGE PROCESS

Michael J. Flanagan

Brown and Caldwell, Consulting Engineers, 66 Mint Street, San Francisco, CA 94103

INTRODUCTION

The conventional activated sludge process consists of two main units, an aerobic biological reactor (oxidation tank) followed by a solids-liquid separator (solids concentrator/sedimentation tank). As shown in Figure 1, process inputs include (1) wastewater, usually effluent from a primary sedimentation tank; (2) return activated sludge (RAS), which is a concentrated suspension of organisms and substrate recycled from the sedimentation tank; and (3) an air or pure oxygen supply to provide oxygen and mixing in the oxidation tank. Process outputs include (1) process effluent; (2) waste activated sludge (WAS); and (3) carbon dioxide.

The optimum performance goal of the activated sludge process can be stated as the production of a specific and consistent quality of process effluent with a minimum

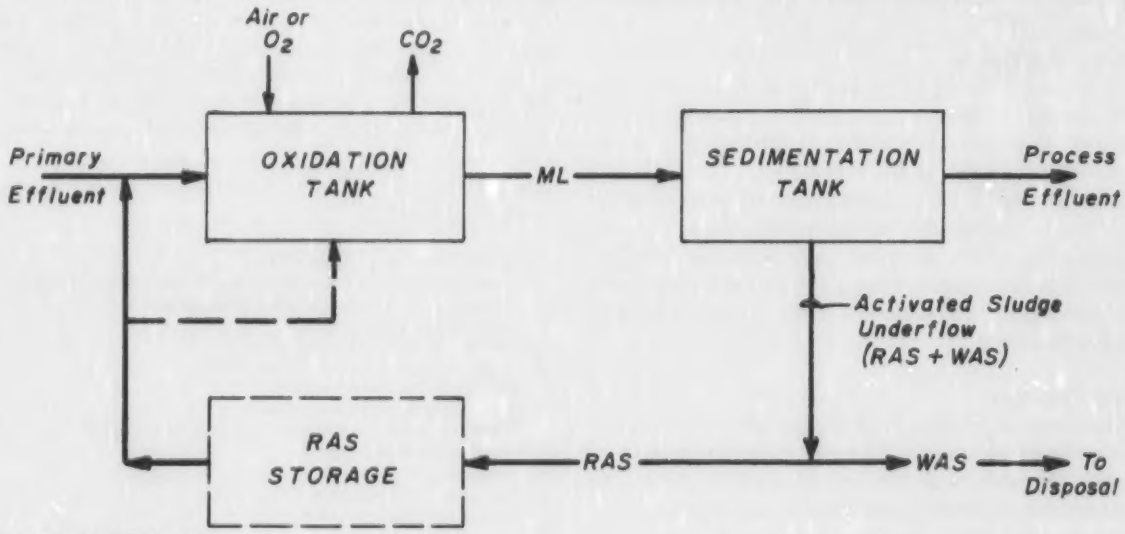

Figure 1. Activated Sludge Process

consumption of manpower, materials and energy. In practice, this goal has not yet been attained. However, a number of activated sludge treatment plants are currently being designed or constructed which incorporate modern automatic control systems for monitoring and controlling the activated sludge process. Simplified versions of these control systems are described in this paper, together with suggested improvements for attaining increased process performance.

The most critical step in the activated sludge process is usually the removal of biological solids in the secondary sedimentation tank. Unfortunately, the importance of gravity sedimentation in the activated sludge process is often overlooked. Provided that the oxidation tanks have sufficient capacity, virtually complete utilization and conversion of the degradable organic matter to biological solids will take place. The process effluent contains both dissolved and suspended oxidizable organic matter. In many plants, the major portion of the oxidizable organic matter in the process effluent is due to suspended solids which have not been removed by the sedimentation process.

Strong interactions exist between the oxidation and sedimentation tanks. For example, the flocculation and settling characteristics of the oxidation tank mixed liquor influence the quality of the process effluent and the solids concentration of the RAS. The solids concentration, in turn, influences the solids concentration that can be maintained in the oxidation tank, the sludge age and the solids flux to the sedimentation tank. An automatic control system for the activated sludge process should therefore monitor and control both process units and their mutual interactions.

PROCESS CONTROL

The following basic control actions can be exerted in the activated sludge process:

1. Control of the point(s) of addition of primary effluent to the oxidation tank (i.e. step feed process).
2. Control of an inventory of activated sludge in a storage tank to offset the effects of diurnal variations in wastewater flow and strength.
3. Control of the air or oxygen flow rate to satisfy the mixed-liquor oxygen demand.
4. Control of the RAS flow rate.
5. Control of the sludge wasting rate.

The extent to which control actions 1 and 2 can be implemented is determined by the configuration of process units and equipment in a given plant. However, control actions 3, 4 and 5 can be readily incorporated in existing plants without making any major modifications to the process equipment. Several different control systems that include some or all of control actions 2, 3, 4 and 5 are described in this paper. All of the process sensors are presently available and either digital or analog logic can be employed to solve the control equations, although, in most instances, digital logic is the preferred technique.

The control systems shown in Figures 4 through 9 all employ a system of RAS pump control which is designed to maintain the sludge blanket in the associated sedimentation tank at a preset level or within preset limits. The blanket levels are set low to minimize the occurrence and duration of anoxic (zero DO) conditions.

Under conditions of limiting solids flux, the operator must override the automatic controls and reduce the solids flux to the sedimentation tanks by taking the appropriate remedial action.

A description of each of the control systems is given below. Instrumentation symbols and identification are in accordance with Standard S5.1 (1973) of the Instrument Society of America.

Control of Oxygen and Air Dissolution in Mixed Liquor (Figures 2 and 3)

Control of air and oxygen dissolution in the mixed liquor is an important parameter in the activated sludge process. The normal strategy is to add sufficient air or oxygen to meet the time-varying oxygen demand of the mixed liquor. Because electrical energy is one of the major operating costs of the activated sludge process, there is an economic incentive to minimize unnecessary aeration.

Most activated sludge plants use air as an oxygen source. The preferred method for air flow control is to maintain the desired dissolved oxygen (DO) level in each oxidation tank. The design of a DO control system depends on the oxidation tank configuration and the aeration method. Numerous examples are provided in the literature. A DO control system that has been successfully applied by Brown and Caldwell to a number of diffused-aeration type activated sludge plants is given in Figure 2.

In the high-purity oxygen process, the oxidation tanks are covered and thus function as on-line respirometers. Four stages are normally provided within each oxidation tank. A cryogenic oxygen plant supplies oxygen to the oxidation tanks in proportion to the oxygen uptake rate as reflected by changes in oxidation tank gas pressure. The oxygen is introduced to each of the oxidation tanks in the first stage only, via the first-stage recycle compressors, and is exhausted as vent gas from the fourth stage. The system is designed to utilize 90 percent of the oxygen supplied. A submerged turbine aerator is installed in each oxidation tank stage to maintain DO and keep solids in suspension in the mixed liquor.

The oxygen supplied to the intake of the first-stage compressors is controlled to maintain a constant gas pressure in the oxidation tanks by modulation of a control valve on the oxygen supply header. The oxygen purity control system is designed to maintain constant oxygen purity in the gas venting from each oxidation tank by modulation of the vent gas valve.

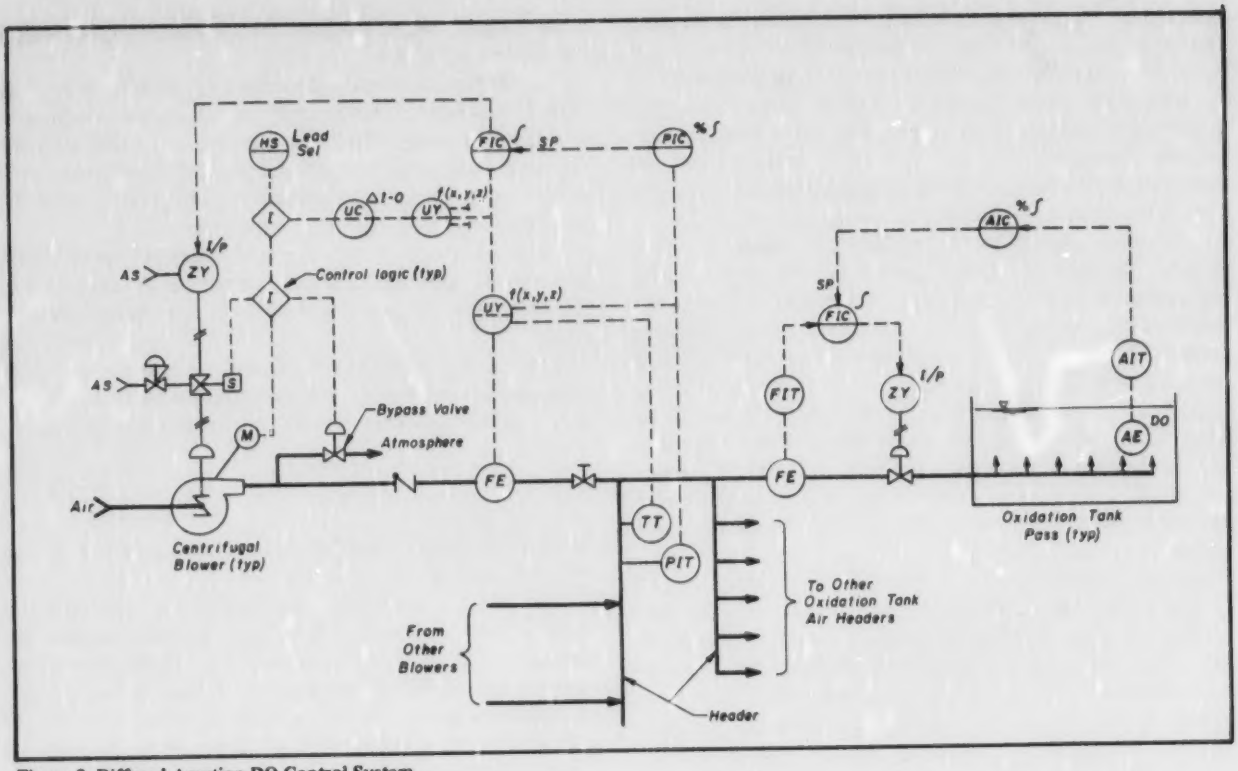

Figure 2. Diffused Aeration DO Control System

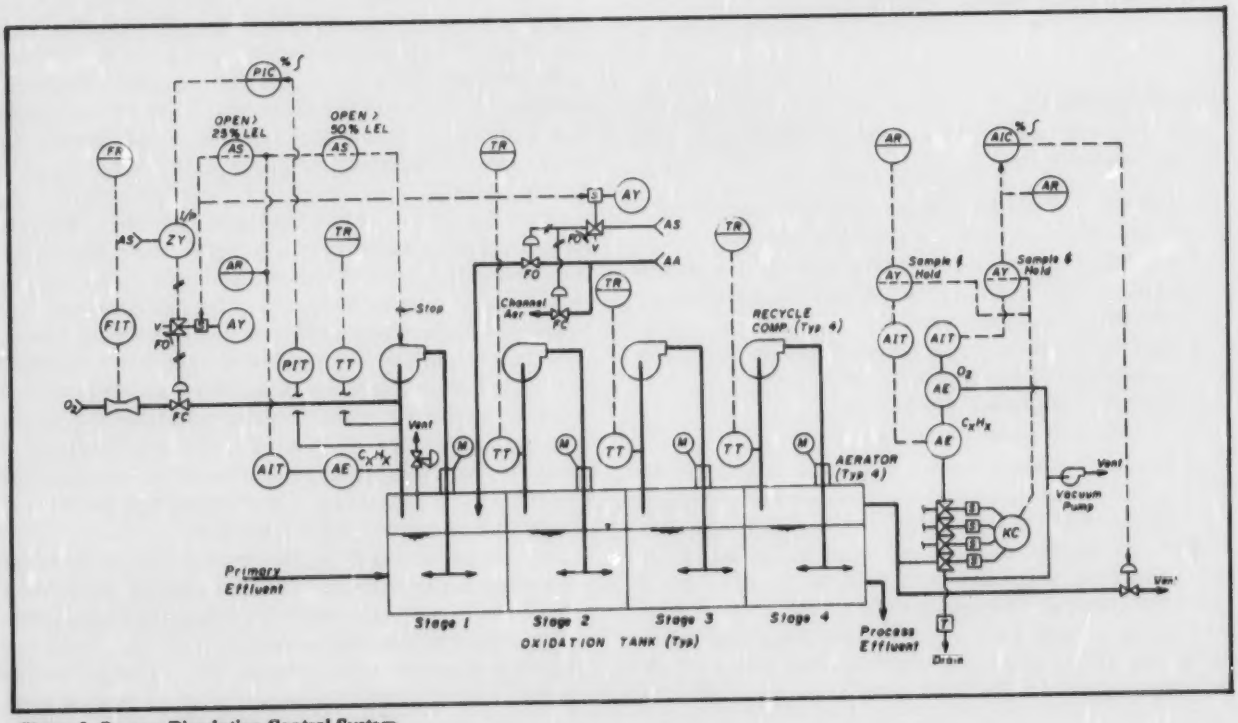

Figure 3. Oxygen Dissolution Control System

Constant Mixed Liquor Solids Concentration Control (Figure 4)

A common method of solids control in the activated sludge process is to maintain a constant mixed-liquor suspended solids (MLSS) level and thus a constant mass of sludge in the oxidation tank. This method provides good results if the strength of the incoming wastewater remains reasonably constant. Under these conditions, the amount of sludge that is wasted equals the net sludge growth in the system. This method is not recommended for activated sludge systems that treat wastewaters with widely fluctuating characteristics because the food-to-microorganism (F/M) ratio is not held constant.

Two infrared sludge blanket sensors are provided in each sedimentation tank to provide on-off control of the WAS pump and thus maintain the sludge blanket between preset high-low levels.

Constant Food-to-Microorganism Ratio Control (Figures 5 and 6)

Two constant F/M ratio control systems are described. In the control system shown in Figure 5, the F/M ratio is calculated by measuring the respiration rates of the return activated sludge and the mixed liquor (Genthe, Arthur and Srinivasaraghavan (1). In the control system shown in Figure 6, the F/M ratio is calculated by measuring the total TOC in the primary effluent, the soluble TOC in the process effluent and the average volatile suspended solids in the mixed liquor.

Both F/M ratio control systems incorporate a sludge blanket level control system whereby the RAS pumps are controlled to maintain a constant blanket level in the associated sedimentation tank. The sludge blanket measurement system comprises a hoist-driven infrared blanket sensor which is track-mounted on the sedimentation tank fixed bridge. Under program control, the sensor measures the blanket level at 6 (say) locations during a radial traverse of the tank, thus enabling the sludge blanket profile and volume to be automatically computed. The sludge blanket level/volume signal so derived serves as the process variable for the RAS pump control system.

A biochemical oxygen demand meter, such as the Badger model OD-2000, can be employed to measure respiration rates of the RAS and the mixed liquor. These measurements, together with measurements of plant flow and RAS flow, can be employed to calculate the F/M ratio.

The microorganism concentration (M) can be obtained from the oxygen demand rate of the RAS. The oxygen demand rate is a measure of the viable microorganism concentration because respiration is essentially endogenous. When the RAS is returned and mixed with the primary effluent, the RAS biomass is provided with the organic substrate present in the primary effluent. Measurement of the oxygen demand of the mixed liquor downstream of the point of RAS–primary effluent mixing reflects the additional oxygen required by the biomass to utilize the new substrate in support of new cell synthesis. Thus the difference between the

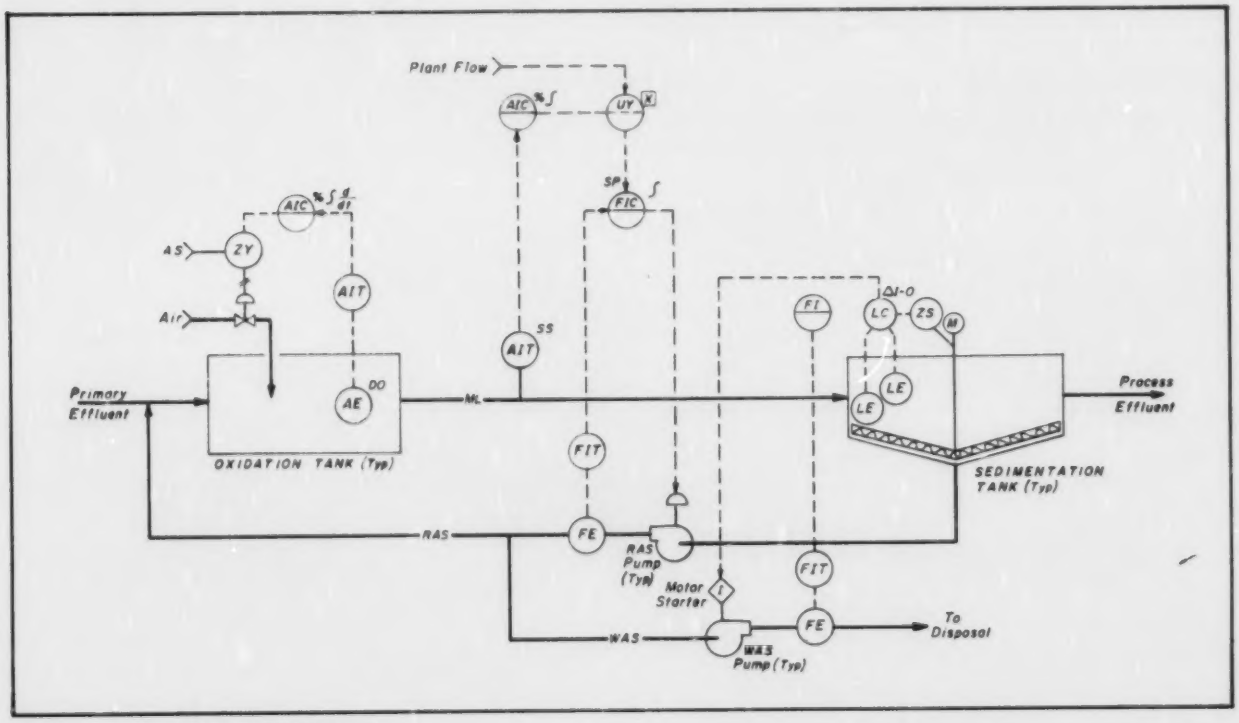

Figure 4. Constant MLSS Control System

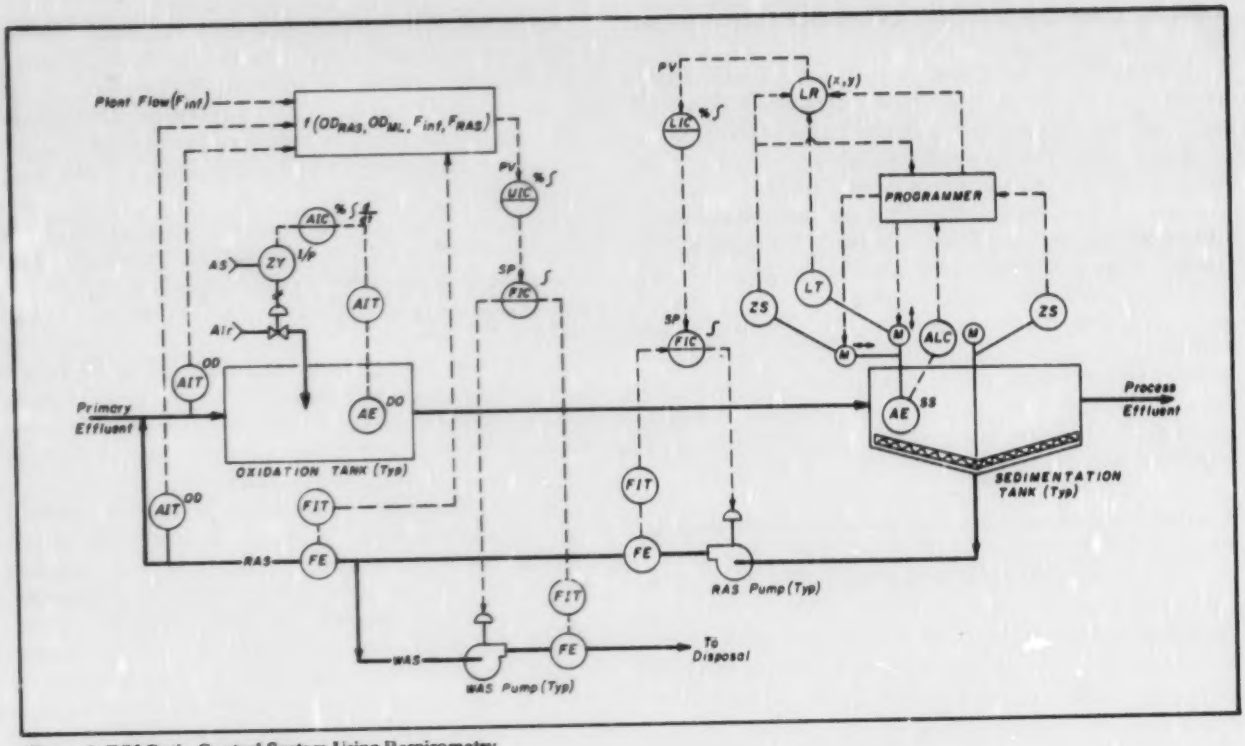

Figure 5. F/M Ratio Control System Using Respirometry

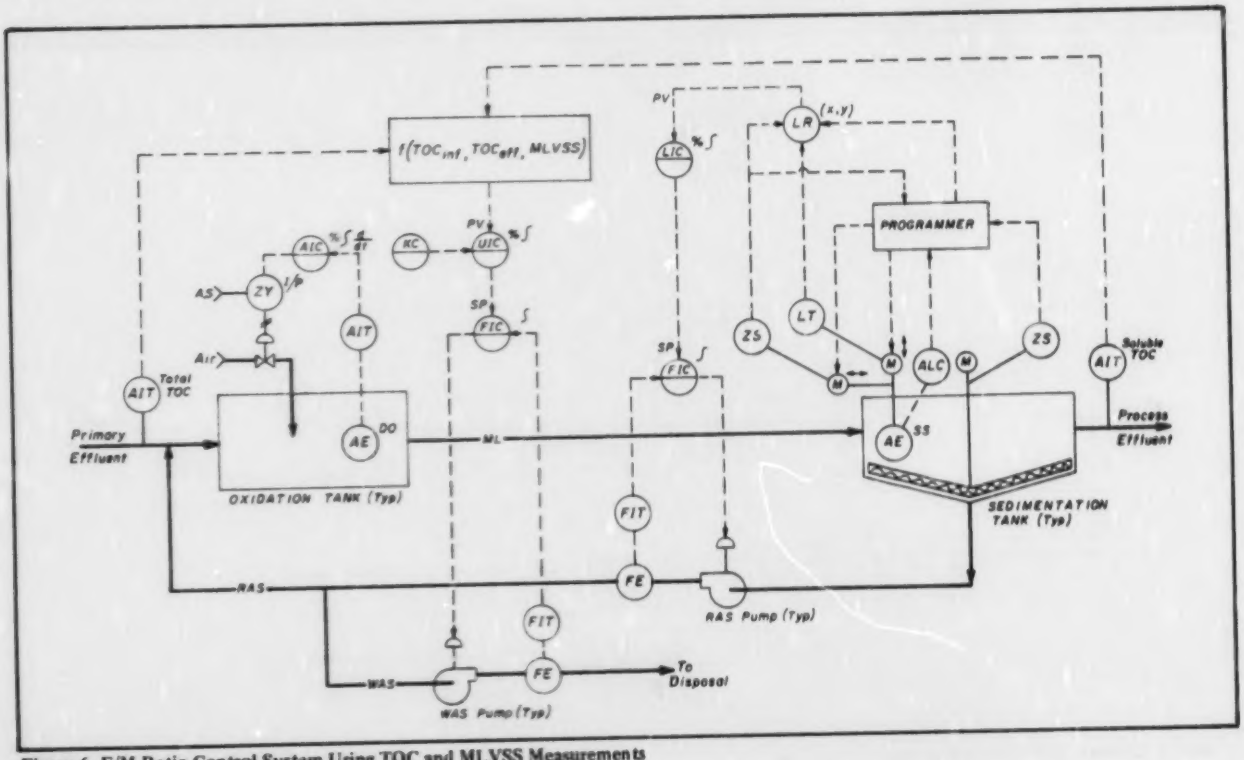

Figure 6. F/M Ratio Control System Using TOC and MLVSS Measurements

oxygen demand of the mixed liquor and the RAS provides a measure of F, the metabolizable substrate in the primary effluent. As shown in Equation 1, the F/M ratio can be calculated from two flow measurements and two respiration rate or oxygen demand measurements.

$$F/M = K \left[\frac{OD_{ML} \, F_{INF} + F_{RAS}}{OD_{RAS} \cdot F_{RAS}} - 1 \right] \quad (1)$$

where:

F/M	=	the food to microorganism ratio (preset by operator)
K	=	constant determined by operating experience for a given plant
OD_{ML}	=	oxygen demand of mixed liquor
OD_{RAS}	=	oxygen demand of RAS
F_{INF}	=	influent flow
F_{RAS}	=	RAS flow which is indirectly controlled by varying the controlled variable F_{WAS}

A second method of F/M ratio control is based on the measurement of primary effluent TOC less the process effluent soluble TOC as a measure of substrate available to the microorganisms, and average MLVSS as a measure of the microorganism population. According to Weddle and Jenkins (2), volatile suspended solids is an excellent index of the viable microorganism content of activated sludge for the practical operating range of activated sludge plants treating domestic sewage. Because the hydraulic regime of most oxidation tanks is between complete mixing and plug flow, several measurements of MLVSS may be required to obtain an average value of the MLVSS concentration in the oxidation tank.

Because the total TOC measurement includes oxygen demand of substrate which cannot be assimilated by the microorganisms, a measurement is made of the soluble TOC in the process effluent, and this value is subtracted from the primary effluent TOC value to give a measure of the substrate available to the microorganisms. The F/M ratio is given by Equation 2 as follows:

$$F/M = K \left[\frac{\text{Total } TOC_{INF} - \text{Soluble } TOC_{EFF}}{MLVSS} \right] \quad (2)$$

where:

K	=	constant determined by operating experience in a given plant
Total TOC_{INF}	=	total TOC in the primary effluent
Soluble TOC_{EFF}	=	soluble TOC in the process effluent
MLVSS	=	mixed liquor volatile suspended solids

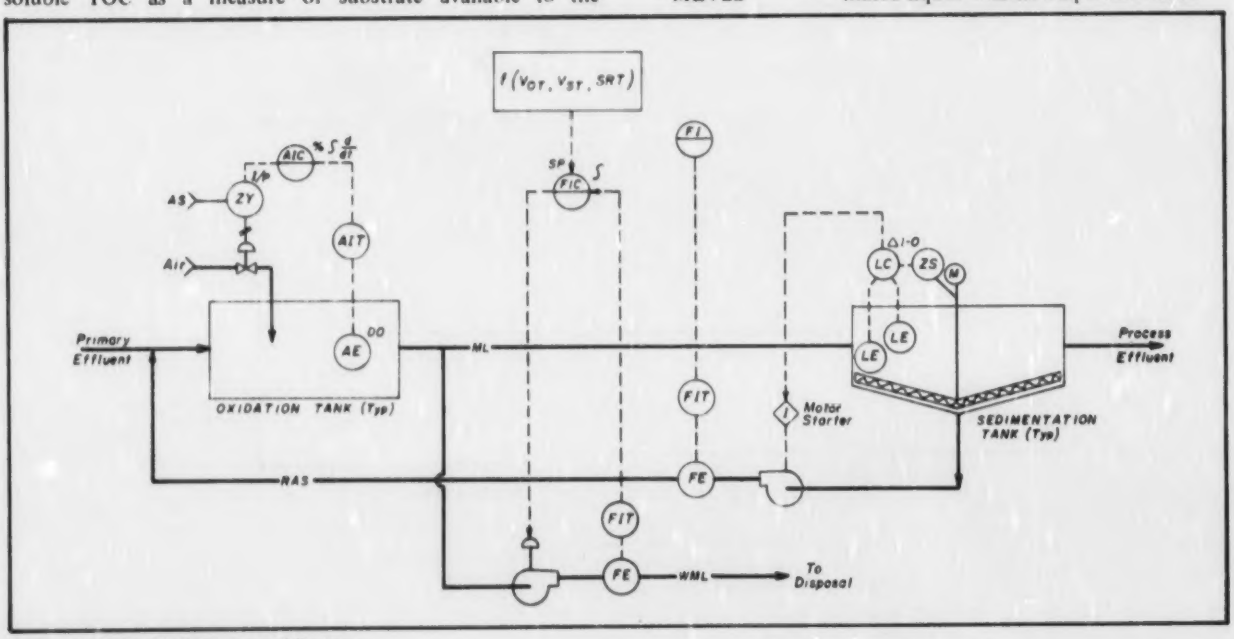

Figure 7. Hydraulic SRT Control System

Solids Retention Time Control (Figures 7 and 8)

Two solids retention time (SRT) control systems are described. Solids retention time is defined as the average retention time of biological solids in the system and includes solids in the secondary sedimentation tank and, if necessary, solids in the mixed liquor and RAS transportation facilities. It is calculated as the sum of the volatile suspended solids (VSS) in the oxidation and secondary sedimentation tanks divided by the sum of pounds of VSS intentionally wasted and those unintentionally lost over the effluent weirs. A distinction is drawn between SRT and sludge age; calculation of sludge age is based only on the solids in the oxidation tank.

The simplest SRT control method is known as the hydraulic control method (Figure 7) and was first proposed by Garrett (3) in 1958. More recent applications of this method have been described by Walker (4) and Burchett (5). If the solids in the sedimentation tank overflow are ignored and mixed-liquor wasting is employed, then the quantity of mixed liquor that must be continuously wasted is given by Equation 3 as follows:

$$F_{WML} = \left[\frac{7.48 \; V_{OT} + V_{ST}}{SRT} \right] \qquad (3)$$

where:

F_{WML} = waste mixed liquor flow in gpd

V_{OT} = oxidation tank volume in cubic feet

V_{ST} = sedimentation tank volume in cubic feet

SRT = solids retention time in days.

Despite the fact that this process suffers from inflexibility and requires the wasting of a greater volume (approximately 4 times) of waste compared to RAS wasting, the control system is very simple and requires only measurement and throttling of the waste mixed liquor stream.

A more exact and flexible method of SRT control is shown in Figure 8 and is based on computing the total solids in the activated sludge system and the total solids wasted from the system, both intentionally and unintentionally. For example, if the SRT is selected as 5 days, then 20 percent of the total solids in the system are wasted continuously. As the influent BOD varies, the WAS wasting rate varies but the percent removal rate from the system remains constant. Furthermore, because a fixed percentage of the total solids are wasted daily, the percentage of viable organisms in the system is not important because if 20 percent of the total solids are being wasted, then 20 percent of the viable microorganisms are also being wasted. The relationship between SRT and F/M ratio is shown in Equation 4:

$$SRT^{-1} = y\,(F/M) - b \qquad (4)$$

where:

y = cell growth constant

and b = endogenous respiration rate

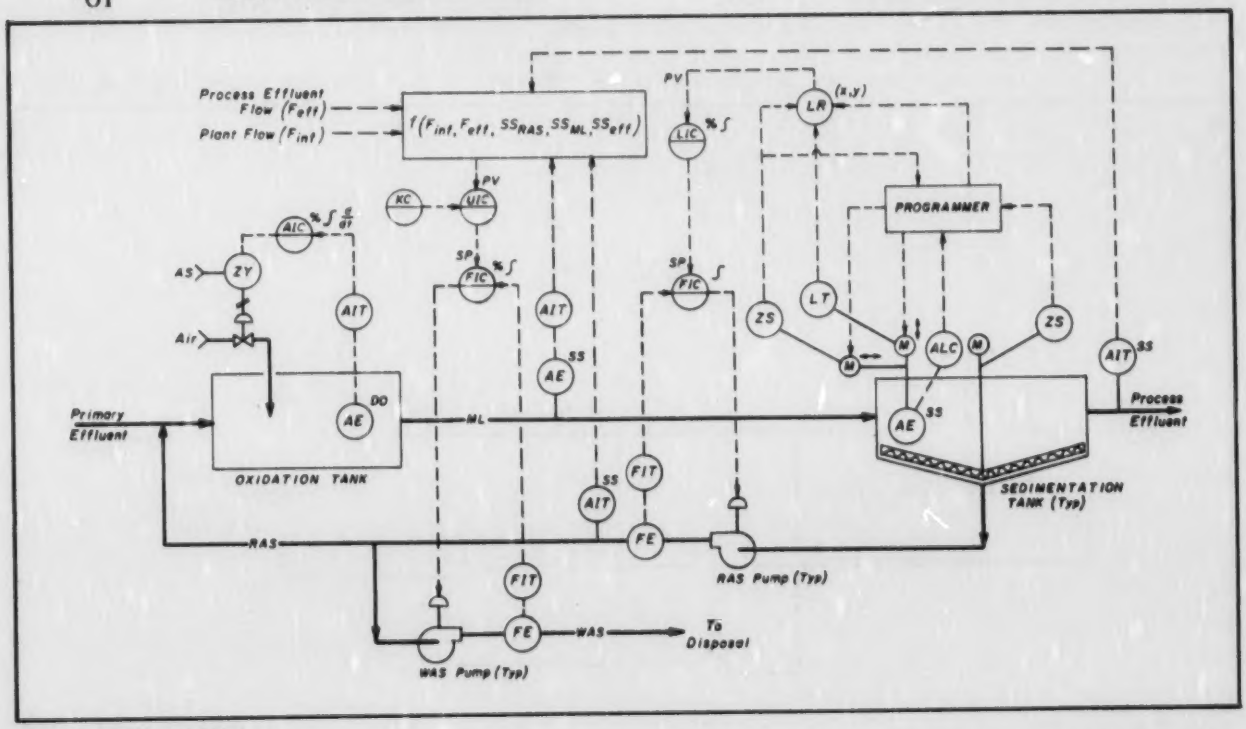

Figure 8. SRT Control System

Thus it can be seen that if the SRT is held constant, the F/M ratio remains constant. Using this method of SRT control, sludge is wasted from the RAS channel. The wasting rate, F_{WAS}, is controlled in accordance with Equation 5:

$$F_{WAS} = \left[\frac{M}{SRT} - 8.33 \cdot F_{EFF} \cdot SS_{EFF}\right]\left[\frac{1}{8.33 \cdot SS_{RAS}}\right] \quad (5)$$

where:

F_{WAS}	=	controlled WAS flow, mgd
M	=	total solids in system, lbs
SRT	=	5-20 days (system set point)
F_{EFF}	=	effluent flow, mgd
SS_{EFF}	=	process effluent suspended solids, ppm
SS_{RAS}	=	RAS suspended solids, ppm

Combined SRT and F/M Ratio Control System

The combined SRT and F/M ratio control system shown in Figure 9 incorporates features provided in Figures 5 and 8, together with RAS storage facilities. Although this process configuration suffers from the disadvantage that the RAS is pumped twice, it should be capable of responding to diurnal variations in BOD loading in addition to maintaining the desired SRT. Basically, the SRT control is used to control solids wasting and the F/M ratio control is used to control the rate of return of RAS to the oxidation tank to match the time-variant BOD load in the primary effluent. If the level in the RAS storage tank reaches a preset high level, an override level control system increases the sludge wasting rate to prevent the sludge level from rising.

CONCLUSIONS AND RECOMMENDATIONS

Several control systems for the activated sludge process involving conventional measurement and control techniques have been described. The performance and productivity of most existing activated sludge plants can be increased by the installation of one or more of the control systems that have been presented in this paper. The degree to which control systems can be retrofitted to existing plants is usually limited by a lack of flexibility in the plant design. For new plants, however, an opportunity exists to incorporate useful control systems. It is recommended that process and instrumentation diagrams (P and ID's) be prepared during the functional design stage to help ensure that a proper balance is established between the process and the control system.

The principal justification for automation is to ensure that treated effluents comply with discharge regulations for various pollutants. Secondary advantages of automation include increased performance and productivity, minimized costs and the like. Presently, the principal obstacle associated with treatment plant automation is the people problem. It is natural for people to think and act in terms of their own expertise and to resist acceptance of the unfamiliar. Because the need for

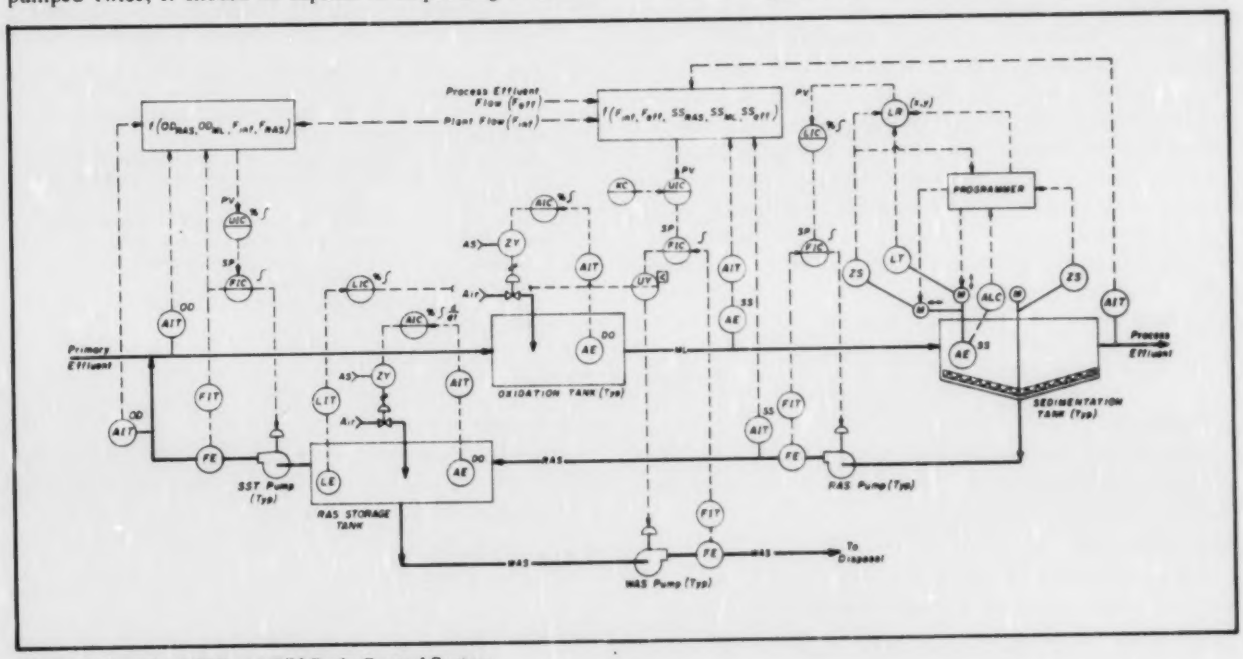

Figure 9. Combined SRT and F/M Ratio Control System

treatment plant automation has only occurred in recent years, it is not surprising that most people associated with the design and operation of wastewater treatment facilities are skeptical of automation. Poorly designed and maintained automatic control systems will tend to reinforce this skepticism.

It appears reasonable to assume that, as effluent standards become more stringent and wastewater reuse for non-potable purposes increases, automation will play an increasing role in the operation of the nation's municipal wastewater treatment plants. Furthermore, as the market for wastewater instrumentation expands, we can expect new and improved on-line sensors, designed specifically for the measurement of wastewater parameters, to become increasingly available in the future. The measurement problem is compounded by the heterogeneous nature of wastewater and the tendency for probes and sample lines to foul up. Measurements such as pressure, temperature, flow and level that are common in the process industries are relatively easy since an extensive collection of sensors has been developed by the process industries and may be used in wastewater treatment plants. The central problem is in the area of analytical measurements.

The use of digital data transmission and control systems is becoming increasingly cost-effective for wastewater treatment plant control and data management. Currently, it is estimated that digital systems are more cost-effective than hardwired systems for new plants or plant expansions larger than 10 mgd (6). Another advantage of digital control systems is that advanced control strategies can be readily implemented. Most unit processes encountered in wastewater treatment are characterized by long dead-times and thus feedforward control can be used to great advantage in minimizing process upsets and reducing process excursions.

Dynamic mathematical models can be employed in digital computer control systems for real-time optimizing control. Brown and Caldwell (7) is currently designing a distributed digital control system for a 125 mgd pure oxygen plant; the design calls for running process models in a supervisory level computer that in turn adjusts the control strategies in the unit process level computers for performance optimization. As has been pointed out by Andrews (8), dynamic mathematical models are usually necessary to describe time-variant wastewater treatment processes and usually consist of sets of non-linear differential equations. However, construction of a dynamic mathematical model requires a number of approximations about process variable interrelationships. If the approximations are incorrect or if unanticipated changes occur in the process, the model is no longer useful.

One method which can overcome this problem is to employ a self-learning adaptive control system. With such a system, it is necessary to specify the important process variables but it is not necessary to specify the interrelationships between the variables. Providing a good process data base is maintained and updated, the model develops and continuously updates process equations which produce the least error in predictions. Examples of such predictions would be process effluent chlorine demand and suspended solids concentration.

The firm of Adaptronics Inc. of Virginia, has developed an adaptive nonlinear modeling system for the predictive control of complex multivariable processes such as the basic oxygen furnace and hot strip steel mill runout table cooling sprays. Background information on nonlinear and adaptive control techniques is given in references 9 and 10.

REFERENCES

1. Genthe, W. K., Arthur, R. M., and Srinivasaraghavan, R., "On-line Oxygen Demand Rates of Primary Influent and Effluent and Their Relation to 5-Day BOD", Presented at 45th Annual Conf., Water Poll. Control Fed. (1972).
2. Weddle, C. L., and Jenkins, D., "The Viability and Activity of Activated Sludge", *Water Res.*, *5*, 621 (1971).
3. Garrett, M. T., Jr., "Hydraulic Control of Activated Sludge Growth Rate". *Sew. & Ind. Wastes*, *30*, 253 (1958).
4. Walker, L. F., "Hydraulically Controlling Solids Retention Time in the Activated Sludge Process", *Jour. Water Poll. Control Fed.*, *43*, 30 (1971).
5. Burchett, M. E., "Physical Facilities for Controlling the Activated Sludge Process by Mean Cell Residence Time", Presented at Northern Regional Conf., California Water Poll. Control Assn. (1973).
6. Systems Control Inc., "Phase IV Report, Palo Alto Wastewater Treatment Plant Automation Project" (1974).
7. Brown and Caldwell, "Process Control Report; Sacramento Regional Treatment Plant" (1974).
8. Andrews, J. F., "Review Paper; Dynamic Models and Control Strategies for Wastewater Treatment Processes", *Water Res.*, *5*, 261 (1974).
9. Control Engineering, "Nonlinear and Adaptive Control Techniques", *Proceedings of the First Annual Advanced Control Conference Sponsored by Control Engineering and the Purdue Laboratory for Applied Industrial Control* (1974).
10. Anon, "Controls that Learn to Make their Own Decisions", *Bus. Week*, April 6, 1974.

DISCUSSION

J. O. Bryant:

The need for good data has been stressed. Would the authors comment on the status of instrumentation to obtain these data?

Michael du Cros:

What specifically is required in the way of new and improved on-line sensors? Is it new parameters, new analytic techniques, better reliability, or a combination of these?

L. A. Schafer:

Can you tell me of any wastewater processes now functioning that successfully utilize composition analysis of the liquid stream (other than residual chlorine)?

Stephen P. Graef:

Would Mr. Flanagan please indicate the application status of each of the control schemes illustrated in his paper? Where have they been tried, or what must be done to implement

them on a full scale field unit?

John K. Nelson:

I have three questions for Mr. Flanagan –

1. In measuring oxygen uptake rates for RAS, is consideration given to solids concentration, so that variations in sludge stability can be taken into account?
2. When measuring clarifier sludge blankets, how is allowance made for hydraulic expansion of the blanket, so that a false clarifier solids inventory is not obtained?
3. An objective of process control is to monitor process variables, and to use these variables to control the process. However, how does one "monitor" a factor K (Equations 1 & 2) which is based on operating experience?

Richard I. Dick:

The critical nature of solids separation in control of the activated sludge process is noted in the paper. However, the control systems presented for maintaining MLSS, F/M, and SRT would not seem to consider this importance of solids separation. Rather, an unlimited capacity for solids separation was tacitly assumed. With real solids separators of limited capacity, this control strategy might result in overload of the final tank. The control systems do have high level blanket regulations, but these controls might contradict the requirements for maintaining the required MLSS, F/M, or SRT.

Poul E. Sorensen:

Six years ago Westberg from Sweden introduced the concept of the totally controlled process, giving a constant effluent BOD. This process required storage of sludge. One of the possibilities for sludge storage is the step-feed process, but has this process in practice been operated as a totally controlled process?

N. J. Biscan:

I agree that sludge storage for additional recycle in times of high loading is an important concept. It is one that needs more field application and testing.

In a recent study at Dow, "Optimizing a Petrochemical Waste Bio-oxidation System Through Automation" (EPA Grant No. S800 766), we developed an on-line analog F/M control system based on repetitive total carbon measurements of the feed and of a diluted and homogenized aeration basin mixed liquor sample. The automated control system gave an updated value of F/M every 12 minutes. The F/M signal proportionally controlled the fraction of the recycle sludge to be wasted.

The system was tested on a glycol feed in a 250 gallon pilot plant. The response time for F/M to return to within 20 percent of its steady-state value after a 50 percent step increase in feed concentration was 17 hours for the controlled system (with no sludge storage capabilities) versus 46 hours in the uncontrolled system. Although there would be faster response times in municipal systems due to the higher yield of bacteria, response times for F/M to return to its steady-state optimum value would still be on the order of hours if sludge storage facilities are not provided.

I think that F/M is one of the most important parameters to be controlled in the activated sludge process. Whether the control action is taken on the basis of total carbon measurements, total oxygen demand measurements, or respirometry (*i.e.*, oxygen uptake) measurements, our research needs should include field testing of incorporating sludge storage capabilities in the F/M control system.

M. Dolan McKnight:

Separating sedimentation from the reactor by interposing a sludge storage tank seems worthwhile. How would the design engineer determine the capacity of such a tank, could the aeration tank size be minimized, and how would this affect clarifier size? Should sludge wasting be constant or variable in such a system?

C. S. Zickefoose:

With respect to the storage of sludge in the activated sludge process, the plant under construction for the City of Portland, Oregon will have the capability to store up to 800,000 gallons in four separate tanks of return sludge and/or high-strength liquors generated in-plant.

The contents of these tanks are aerated and can be introduced to the aerators by pumps; by monitoring TOC and solids at various points in the process, in-plant loads and return flows can be introduced at optimum times during the day.

The plant has a design capacity of 100 MGD average flow and is due to start up in the fall of 1974.

Heinrich O. Buhr:

The flow diagrams presented by Mr. Flanagan illustrate some of the strategies currently proposed for control of activated sludge plants. It seems likely, however, that research on detailed process models which fully recognize the time-varying nature of treatment plant operations might lead to a re-examination and reformulation of many of these concepts.

As an example, consider SRT and F/M ratio control: It is generally agreed that it would be desirable to maintain a constant biological growth rate, or F/M ratio, in the aeration system. Further, it is often assumed that this may be achieved through maintaining a constant SRT, based on relationships such as equation 4 in Mr. Flanagan's paper:

$$SRT^{-1} = y(F/M) - b \qquad (4)$$

However, this equation is based on steady-state considerations, and in a plant which is subject to diurnal flow variations the relationship is true only on a "daily average" basis. In practice F/M will vary throughout the course of the day, typically from 50% to 170% of the average value, even when the sludge wastage rate is held constant.

If closer control of F/M is required, a more direct approach than SRT control must be adopted. For this purpose, "food", F, may be measured by the techniques suggested by Mr. Flanagan, or estimated from the air supply rate as done by Brouzes (Andrews, Ref. 4); then mass of micro-organisms, M, may be adjusted in accordance with the variation in F, to maintain F/M constant. In the absence of sludge storage, the most effective control of M may be achieved by manipulating the return sludge (RAS) rate. Some schemes, however, propose to keep total RAS flow rate from the sedimentation tanks constant, and to attempt F/M control by varying the waste (WAS) flow rate instead (cp. Brouzes, and Figures 5 and 6, Flanagan). A typical system material balance will show that the expected WAS flow rate for long-term steady-state operation is only about 3% of the RAS rate, so that a control strategy which utilizes WAS as the manipulated variable, can at best exert a marginal influence on the mass of solids in the aerator. This is not to say that variation of sludge wasting rate will not cause changes in biological growth conditions, but the effect is exerted through slow changes of sludge inventory on a time scale measured in days. For F/M control on an hour-by-hour time scale, a more forceful control action is required, and this usually means direct manipulation of RAS flow rate.

The main purpose of sludge wasting control should be to maintain sludge inventory at a desired value on a day-to-day basis and this may be achieved by simple level control as illustrated in Figure 4 (Flanagan). Even in this case, however, dynamic studies will show that the time when the sludge blanket is at its highest (and the waste sludge pump will tend to switch on) may not necessarily be the best time to withdraw sludge. For example, with diurnal inflow fluctuations and, say, ratio RAS control, high blanket levels will occur when inflow is highest; however, since the controlled RAS flow rate will also be relatively high at this time, the recycle sludge concentration will be at its **lowest** for the day. When using straightforward level control, waste pumps will thus switch on during periods of low sludge concentration, which will tend to maximize, rather than minimize the volumetric quantity of waste sludge to be withdrawn daily. A preferable strategy would be one which programs sludge withdrawal to take advantage of periods of high sludge concentration.

These points illustrate some of the information which can be gained from a study of dynamic process models. Research in this direction is clearly a prerequisite for the design of adequate control strategies.

Gustaf Olsson:

In order to control a process a reasonable quantitative **performance index** is needed. Of course we know that the goal is the cleanest possible water at the smallest possible cost. The problem is what parameters are really affecting the effluent quality. This also relates directly to the choice of proper models. More research is needed to establish what setpoints on DO, MLSS, F/M, settling characteristics, etc., should be used. Thus a good model is needed for better understanding of the quantitative performance index, and both such an index and a model is needed to obtain good control.

J. O. Bryant, Jr.:

Few treatment plants operate as they were designed–SRT, MLSS, etc., usually cannot be adequately, and accurately, predicted during the design phase. Hence, operation of most facilities becomes a function of the operator's ability to "learn" what the best parameter values for his plant are. Adaptive, non-linear control has in reality been applied routinely by the good operator.

Wayne C. Smith:

As more and more batch-type discharges from industries are going to an activated sludge system, how do we handle these in the models and how do we predict the effects of these discharges on the treatment system, both as regards effluent quality and upsetting the system? Also, how do we include non-domestic materials that degrade very slowly in this model?

James A. Mueller:

With respect to the pure oxygen system, three problems exist with use of data to verify our mathematical models, namely:

1) no gas flow measurements between stages
2) no data on the amount of gas lost from the various stages due to leakage, and
3) when dealing with the pure oxygen system, our models must not only include the biological growth functions but also the system chemistry due to CO_2 dilution of the gas phase.

This makes our models more complex and more difficult to verify. However, system understanding is increased by making the attempt.

In general if mathematical models are to be effectively used in design and control of biological treatment systems, the model should include measureable parameters and have received experimental or field verification. In most cases a simplified model which approximately describes the system will be more effectively used than a complex model that more closely describes the actual system. The next viable phase of research in the modelling area appears to be verification and practical utilization instead of complex model development.

P. M. Berthouex:

The problem of pilot plant and field scale testing has been mentioned. I would like to propose that we need more partnerships between model-builders and others. Dr. Andrews has been in such partnerships and I'm sure would agree that more of this involving others will be profitable. It seems that

more people using the iterative cycle theory–data–analysis–theory are needed.

Some data we at Wisconsin have collected shows that certain mechanistic models predict too much variation in effluent quality. We have seen systems that show no significant dynamics in the output in spite of fairly strong input dynamics (10 to 1 diurnal variation in organic load). Of course, not all plants show such stability. Can we predict which plants (processes) will exhibit strong dynamics?

I have heard you say before that a good model will predict system failure. Do you think we need models to predict system recovery after failure? My thought is that a control strategy designed to prevent failure may not be sufficient to bring a "sour" system back into service. Do you think we can predict, or need to predict, the dynamics of recovery?

Second, we need to ask, "How much control is needed?" and "How will load balancing help us?" The answer, I expect, will be different for small plants than for large plants. For small plants it might be nice to know how to design so that no elaborate control strategies are needed.

Another area where attention should profit us is stochastic analysis of actual operating data and to work toward stochastic dynamic models. To some this approach seems to conflict with mechanistic modeling. Really they should complement each other; each has strengths and disadvantages. We need more experience with both, but of the two the stochastic methodology is less well understood, probably because it is less intuitively satisfying. In particular, these models are developed from "normal" operating dynamics. I doubt they will predict failure and I know they are not useful once a system has gone far out of control.

Gustaf Olsson:

There is a clear need for a whole spectrum of models describing, for example, an activated sludge plant. Which description to use would depend on the purpose for which the model is required.

System identification is a very powerful technique to establish what is the proper degree of complexity required. Using this technique, theoretical models can be compared and adjusted to real plant performance. Not only input-output relations (*i.e.* the black box approach) but also parameters for physical *á priori* models can be calculated. Moreover, more reliable models of the inherent system noise can be established.

Lars Pallesen:

The topic of modeling has been brought up several times this morning. In this connection I would like to make the following point: It is possible to drive a car without understanding why it works, that is, without knowing how each segment of an automobile functions in detail! It may be interesting to understand how, say, the engine is working, but if the objective is to drive the car, such knowledge is of limited usefulness. What you do need to know is some "macro" aspects of its total behavior–don't bother about how the steering gear is put together, but concentrate on learning how the car responds to turning the steering wheel. In short: worry selectively.

Similarly, the kind of mechanistic modeling well exemplified in the paper presented by Dr. Andrews, is clearly scientifically very interesting. At the present stage of development, however, these "micro" models appear to be unable to completely explain the behavior of sewage treatment plants, and, in the mechanistic way of thinking, further refinements are therefore needed–making the models even more complicated.

Fortunately mechanistic models are not needed, if our goal is to control. Much less complicated empirical models, describing macro features will be adequate, particularly if models reflecting the stochastic nature of wastewater treatment systems are employed.

This approach to the control problem requires, of course, that real plant data be available to do the modeling. The very fact that the empirical modeling procedure forces the researcher to compare his models with real data, must be considered an inherent strength of the method.

Russell H. Babcock:

With respect to automation of biological wastewater treatment processes, it should be noted that present practice in other fermentation industries such as brewing and the production of antibiotics is still very crude. According to one major instrument manufacturer, the manufacturing of antibiotics is a simple batch process. Temperature is controlled and pH is measured. The principal control is by laboratory analysis of successive samples. Laboratory animals are still used as means of testing the final product.

Pilot plant work is underway which includes DO control and pH control. This work, however, is in its infancy and has not yet been applied to routine production. The process will remain batch with the instrumentation being used to minimize laboratory control. **Conclusion:** most fermentation processes are still controlled by the basic techniques of laboratory analysis which have been in use for many years.

Carmen F. Guarino:

The automation of anaerobic digestion should not be made complicated. The CO_2 content of the gas, plus the quantity of CO_2 generated, goes a long way towards automating the digestion process.

K. J. Jacobson:

In response to Mr. Babcock's comment, the unwillingness of the fermentation industry to implement warranted and available sophistication in control strategies should not be used to excuse the same deficiency for wastewater treatment. Sophisticated control instrumentation is in fact being applied

to new ventures in the fermentation industry (protein manufacture), and gradually to the classic ventures, drug and alcohol production. At Penn we are developing a minicomputer interface for a pilot-size fermentor. At present data acquisition and data handling capabilities are being established for model development purposes. The eventual goal is automatic control of the important (and previously unaccessible) fermentation parameters. Continuous measurement of cell mass using fluorometry and of glucose substrate by enzymic oxidation are being developed. These quantities, along with the more standard measurements, will enable automatic calculation of growth rate and yield coefficients for use in process control.

The dynamic character of biological processes has been treated this morning, but one important addition has not been discussed. The Monod growth kinetics, or some derivative which accounts for inhibition, is empirically applied and in general is a steady-state model since it ignores time lags. It does not fit dynamic data nearly as well as a first-order dynamic kinetic model, as has been shown by Young, Bruleynd Bungay (1). As has been amply pointed out today, this model refinement is hardly necessary for implementing practical control strategies. Indeed steady-state models can do a remarkable job of predicting actual plant performance for activated sludge wastewater treatment (2). On the other hand, accurate predictive models will provide important insights to aid understanding and designing systems, and hence assist in designing the most useful control strategies. Therefore, although sophisticated dynamic models may never be used for process control, their development is an immediate and essential research need in order to establish optimal designs for processes and control strategies.

REFERENCES:

1. Young, T. B., Bruley, D. F. and Bungay, H. R. III, "Dynamic Mathematical Model of the Chemostat," *Biotechnol. Bioeng.*, 12, 747-769 (1970).
2. Landis, J. G., Casey, J. P., Hartzog, D. G., "Oxygen Activated Sludge: Design by Waste Analysis and Modeling," presented at 47th Annual Conference, WPCF, Denver, CO (1974).

CLOSURE

John F. Andrews:

Reply to J. O. Bryant, Jr.: The author is not engaged in research on the development of sensors and therefore cannot comment in detail on the status of instrumentation for making measurements in wastewater treatment plants. Throughout this workshop there have been many comments regarding the nonavailability of sensors for making these measurements. However, there are some basic questions which should be asked before we rush into an accelerated program on sensor development. Among these are:

1. What measurements are really needed in order to exert effective control over the plant?
2. How frequently should these measurements be made in order to exert effective control?
3. How accurate do the measurements need to be in order to exert effective control?
4. How much time delay, between the time the sample is taken and the time when the results are known, can we tolerate and still exert effective control?

The answers to these questions can best be obtained by a dynamic analysis of the plant and its associated control system. As an example, there is a tendency to search for continuous, on-line sensors whereas in many instances the dynamic response of a process is sufficiently slow so that discrete measurements at relatively long time intervals would be adequate. The allowable period between samples could be defined using sampled data control theory if the dynamic behavior of the process could be quantitatively defined.

Reply to P. E. Sorensen: The author is familiar with Westberg's work which was a pioneering effort in dynamic modeling and control of the activated sludge process. As given in the paper, the author believes the step feed process offers great potential for process control. However, the author knows of no plant currently using the potential of step feed in an automatic control loop. This is one of those areas where pilot or field studies are needed.

Reply to Wayne C. Smith: The specific oxygen utilization rate (mass of oxygen utilized per unit mass of sludge per unit of time) should be a valuable means of detecting batch discharges of concentrated organic wastes or toxic wastes. The dissertation by Busby (1) should be referred to for detail on the use of this parameter as a signal for control purposes.

Calculation of the specific oxygen utilization rate would be relatively easy for the high purity oxygen process where the reactors are covered and the flow of oxygen into the reactors are metered. Coupling of the oxygen balance with a solids balance would then permit calculation of the specific oxygen utilization rate which should be a direct measure of sludge activity.

Reply to James Mueller: The author is in strong agreement with Dr. Mueller concerning the need for model verification. The ease and speed with which computer simulations can frequently be made may lead to a neglect of this very important aspect of model development and, in the extreme, can result in one becoming so enamoured with the techniques that the purpose for using them is almost forgotten. This can lead to the generation of large quantities of worthless results if the model is not a reasonable representation of the real system.

Mathematical modeling, computer simulation and physical experimentation are not exclusive but rather complement one another and should therefore be used in an iterative manner. It is obvious that results of physical experimentation can provide better numerical values for parameters in computer simulations using mathematical models; however, knowledge gained in simulation is also useful for modifying the mathematical model, guiding physical experimentation, and establishing the type and frequency of field observations needed. Expressing

relationships in mathematical terms, computer simulation and physical experimentation are all part of the same problem, model development, and to a large extent can proceed simultaneously.

The author is also in agreement with the need for model simplification for field use. A model which is too complex is subject to either "misuse or disuse." Sensitivity analysis can be used for this purpose by indicating those variables which have little effect on the outputs and can therefore be considered as constants.

A more detailed discussion of some of the above mentioned points is given in (2).

Reply to P. M. Berthouex: The author is in agreement with the points raised by Dr. Berthouex. For example, the inputs to wastewater treatment plants are comprised of both deterministic and stochastic components and our most recent work is considering both.

The development of models, to a certain extent, is dependent upon the tools with which the investigator is most familiar. Just as Dr. Berthouex has suggested that we need more partnerships between model builders and others, I would also suggest that we need more partnerships between those concerned with deterministic models and those working with stochastic models.

REFERENCES:

1. Busby, J. B., "Dynamic Modeling and Control Strategies for the Activated Sludge Process," Ph.D. Dissertation, Clemson University, Clemson, SC (1973).
2. Andrews, J. F., "Application of Some Systems Engineering Concepts and Tools to Water Pollution Control Systems," Proceedings of the Symposium on the Use of Mathematical Models in Water Pollution Control (A. James, ed.), University of Newcastle upon Tyne, England (1974).

Michael J. Flanagan:

Reply to Michael du Cros: A combination of these, for example, sample conditioning equipment for automatic wet chemistry analyzers requires improvement. Real-time or near-real-time measurements that are required include viruses, enzyme activity, nitrogen and bioassays.

Reply to L. A. Schafer: Yes–a number of Brown and Caldwell-designed plants have successfully employed on-line sensors for the measurement of composition variables such as pH, ORP, conductivity, DO, etc., for up to 10 years.

Reply to S. P. Graef: All of the control systems shown, except those that include F/M ratio control, have been successfully applied. We are currently designing an activated sludge plant that will incorporate the control concepts shown in Figure 9. Sludge storage will be accomplished in the oxidation tanks by using the step-feed mode of operation. Power-operated slide gates will be employed to modulate the quantity and point of addition of primary effluent to the oxidation tanks.

Reply to J. K. Nelson:

1. As we have not tried F/M ratio control using respirometry, I cannot give a definite answer to this question.
2. In a properly designed clarifier, hydraulic expansion of the blanket should not occur within normal operating limits. Temporary expansion of the blanket caused by rotation of the sludge collector does not affect the blanket level measurements because the level programmer only operates when the sludge collector is at right angles to the horizontal travel axis of the level sensor.
3. In Equation 1, for example, K is an empirically determined constant which relates F/M, the computed variable, to the measured variables on the right-hand side of the equation. The computed value of F/M serves as the process variable for controller UIC (Figure 5), the output from which is proportional to the difference between the desired and computed F/M ratios. I would also point out that other measured variables may be required in actual practice; however, the basic measurements required are oxygen demand and flow.

Reply to R. I. Dick: I agree–the activated sludge process control systems given in the paper are not valid under limiting solids flux conditions. The way we would approach the problem is to generate a velocity-solids level relationship through a series of mixed liquor settling tests conducted daily at different solids concentrations ($v = a \times c^{-n}$). A computer program is used to produce the limiting solids flux and its associated limiting underflow and mixed-liquor concentrations as a function of sedimentation tank overflow rate and return sludge ratio. In actual operation, if limiting solids flux conditions are approached, the operator will exercise remedial action such as reducing the total sludge inventory in the system, placing idle tanks in service, changing operating mode to reduce solids flux, etc. When normal operating conditions are restored, the automatic control system is placed back in operation.

Reply to P. E. Sorensen: Yes–at the Renton Treatment Plant in Seattle, Washington.

Reply to M. D. McKnight: For a given plant and associated F/M ratio, storage for M can be estimated from the average time that F exceeds F average.

Report of Working Party on RESEARCH NEEDS FOR AUTOMATION OF BIOLOGICAL TREATMENT PROCESSES

Paul H. Woodruff
President, Roy F. Weston Inc., Weston Way, West Chester, PA 19380
A. W. West
Office of Enforcement and General Counsel, National Field Investigations Center, Environmental Protection Agency, Cincinnati, OH 45268

INTRODUCTION

Biological processes are expected to continue to be the principal means of removing biodegradable dissolved organic matter and reducing the volatile solids content of putrescible solids produced by wastewater treatment facilities. Biological processes are capable of high dissolved organic removal efficiencies and generally have a substantial cost-effectiveness advantage over alternative methods. Engineered systems utilizing biological processes for wastewater treatment have been under development for the past 100 years. Much progress has been made during this period of time in adapting the process to overcome the various treatment problems which have been encountered. A considerable amount of research has gone on, the preponderance of it in the past thirty years. Yet, the full potential of biological processes to produce the high-quality effluent demanded by today's standards has not been achieved. One of the major problems in achieving reliable peak performance is insufficient understanding of process dynamics and a lack of adequate instrumentation to improve treatment plant performance through adoption of automation for process controls.

PROBLEMS

The following are major problems relative to automation of biological treatment processes, as brought out at the workshop.

1. Lack of dynamic models of biological processes (activated sludge, aerated lagoon, trickling filter, stabilization ponds, rotating filter media, anaerobic sludge process, aerobic sludge digestion, and anaerobic sludge digestion) which will adequately identify the essential process variables and, therefore, the needed process measurements. One area which typifies this problem is the poor understanding of the impact of variables in the biological reaction process on solid-liquid separation.
2. Lack of accepted and field-tested process control strategies.
3. Poor understanding of biological treatment processes.
4. Lack of knowledge regarding available instrumentation and its application, adaptation and performance in this area.
5. Lack of incentive for manufacturers to develop new instrumentation.
6. Insufficient appreciation of the benefits of instrumentation and automation and the consequent inability to provide a strong incentive based on a strict cost/benefit analysis.
7. High-quality treatment results are obtained at the expense of relatively high consumption of energy and natural resources.
8. Unavailability of necessary sensors in sufficiently reliable and appropriate form to meet process monitoring and control needs.
9. Lack of industry-wide standard instrumentation specifications.
10. Generally low operating and maintenance skills, particularly with respect to understanding and proper utilization of additional instrumentation and control equipment.
11. Inadequate communication among operators, designers, equipment suppliers, researchers, and regulatory agency personnel.
12. Lack of definition of necessary and discretionary monitoring instrumentation and automation which can be supported by the available human resources at a small treatment plant.

RESEARCH NEEDS

The following research needs for the automation of biological treatment processes have been listed in order of priority:

1. Develop improved means of **information exchange:**
   There is a dire need for making better use of past and present experience. This can be done only by setting up substantially improved means of sharing ideas and experience between those groups (operators, designers, equipment suppliers, researchers and government regulatory personnel) who are involved in this area of technology. There is a particular need to develop new mechanisms to encourage the rapid exchange of experience with existing instrumentation and automation.
   There is a need for development of a standardized plant

performance data-logging report. Standard formats should be developed for each type of biological process. In order to have such standardized reports gain uniform acceptance and use, they would have to be adopted by EPA and their use required as part of the NPDES permit and monitoring process.

Feasibility of a private "Underwriter Laboratories" type of evaluating and testing organization should be considered for independent evaluation. Such an organization could be supported by users of the instrumentation that is tested.

2. Develop a thorough **assessment of available instrumentation**:

   A thorough assessment should be made of presently available instrumentation with respect to its applicability for the purpose intended, reliability, serviceability, and consistency.

   EPA has recently sponsored a study that was intended to provide such an assessment. Many believe, however, that the scope of the study was far too limited to provide conclusive information.

3. Develop adequate **mathematical process models**:
   a. Functioning of biological processes must be understood sufficiently well to relate process variables in a mathematical model which will accurately simulate the real-world process. Such a model would contain many sub-models and would have to consider such wastewater input characteristics as flow, temperature, dissolved organic strength, nature of dissolved organics, suspended solids, dissolved solids, pH, nutrients, toxicants, etc. Other parameters, such as the amount of active biomass, detention times, degree of mixing, gas diffusion rates, organic removal kinetics, solid-liquid separation rates, suspended solids carryover from final clarifiers, clarifier underflow, solids concentration, sludge recycle rate, etc., would also have to be considered. The preceding parameters apply to the activated sludge process; additional parameters would have to be considered for other types of biological processes.
   b. The advantages of flow control and the means of accomplishing it also need to be researched.
   c. For the present state-of-the-art a particularly vexing research need is to improve the ability to predict and, therefore, hopefully control the secondary clarification processes. Basic research is required to better understand the solid-liquid separation phenomenon. Sludge dewatering operations must be considered an integral part of the biological process when part of the liquid portion (*e.g.*, filtrate or centrate) is returned to the head of the treatment system; thus sub-models satisfactorily describing the several sludge dewatering methods must be developed.
   d. Mathematical models for nitrification-denitrification biological processes should also be developed.
   e. Research is obviously required to better understand and manage the interactions of all elements of the total treatment system, *i.e.*, sources of wastewater, collection system, pretreatment, primary treatment, secondary treatment, tertiary treatment, reintroduction of treated water to the environment and operating, maintenance and management manpower.
4. Develop practical operating **control strategies**:

   A very important research need is to devise and test, by mathematical models and plant control tests, the strategies for biological processes. A full-scale demonstration facility is required.
5. Develop means to provide **economic motivation for process equipment and instrumentation improvements and use** (invention, development, application):
   a. The lack of fundamental knowledge concerning benefits *vs.* costs of automated biological treatment processes is a major obstacle to the general application of these automated systems. An important research need is to define the potential improvements in biological process performance in a quantitative manner and the potential costs or savings in biological treatment process construction and operation. This cost-benefit analysis is of utmost importance in making the decision to automate.
   b. Automation has considerable potential for minimizing consumption of energy and chemicals while, at the same time, optimizing treatment performance when compared to manual methods. This potential should be addressed as part of the preceding research areas; however, due to the current national and international concern for minimizing energy and raw material consumption (even when used for environmental betterment), this area deserves special attention. Although not directly related to automation *per se*, basic research is needed on methods to increase the performance yield as a function of energy and materials consumed. This research needs to consider the total system, *i.e.*, human labor, energy, raw materials, and pollutants created in the manufacture of energy and materials required for the treatment facility, as well as use of same for operating purposes.
   c. A thorough market research effort is needed to define the size and time element for various instrumentation/automation components to speed up development where market forces seem to justify it.
6. Develop **sensors for real-time monitoring and control** of biological processes:

   A detailed instrumentation-needs survey should be made, with input and suggestions solicited from operating personnel on a national basis. At least the following types of sensors are needed:
   a. Sludge blanket indicator that would give *in-situ*

readings and would be readable over at least a six-foot span.

b. Automatic settleability indicator for process control use.
c. A respiration-rate sensor integrated with a suspended solids sensor to give unit oxygen uptake rates.
d. Reliable suspended solids sensors for a range of 0 to 5,000 and 4,000 to 20,000 milligrams per liter.
e. On-line TOC analyzer.
f. An on-line replacement for the BOD test.
g. On-line analyzers for ammonia, nitrate and phosphorus.
h. Sensors for achieving methanol dosage control on the denitrification stage of nitrification-denitrification treatment.

7. Develop **standard specifications**, acceptance standards and application techniques:
Research is needed to develop standards that include specifications for application, acceptance, and maintenance that are related to users' needs.
8. Develop improvements in the **man-instrumentation interface**:
Research is needed to clarify the operator's needs for instrument support and the best means of extending his abilities through instrumentation. There is a strong need for improved educational materials for operations and maintenance personnel relative to the application and care of instrumentation for process control.
9. Develop improved means of effecting **solid-liquid separation**:
This item is actually not one that involves instrumentation and automation so much as that it deals with an important component of biological processes. Significant improvement is needed for effecting improved solid-liquid separation for both the forward-flow process and for solids-processing flow streams. Return streams from solids processing can drastically affect biological systems. (It should also be noted that present solids dewatering systems are inordinately costly.) Many biological processes depend on the effective separation of the biomass from the wastewater. Insufficient attention has been paid to this portion of biological processes. More research is needed to better understand the relationship between waste characteristics, biological reactor performance, and sludge settling characteristics, which in turn would improve prediction of effluent suspended solids from final clarifiers.
10. Develop instrumentation and automation particularly suited to **small treatment plants**:
Small plants present a particularly difficult problem with respect to instrumentation. This is due to several things. For one, instrumentation and automation equipment in a small plant usually accounts for a larger percentage of the total construction costs, and secondly, operating and maintenance personnel are usually substantially less qualified than personnel available at larger plants. However, this may also suggest that automation under the proper circumstances could provide a means of improving treatment plant performance and help to compensate for the shortage of trained operators.
Research is needed to better adapt present instrumentation and automation technology to small plants. The role of the operator and degree of manual control may be more significant in small plants than large. Thus, adaption of present technology that still requires significant operator involvement may represent a long-term optimum.

SUMMARY

Priorities have been listed based on the following overall philosophy. Improved communication is fundamental to optimizing present knowledge and intelligently directing all future activity. Likewise, better knowledge of present automation capabilities/equipment would speed the return from existing investment. Future development of technological improvements would seem to be best directed if basic system models were available. They should tell us what we need to measure and suggest operating control strategies. Once we know what we need and how it is to be used, we need to determine the economic incentives to insure that all are aware of economic feasibility and opportunities. Development of sensors and needed man-instrumentation research would seem the next logical priority, followed by specific consideration for the many small treatment plants.

AUTOMATION OF PHYSICOCHEMICAL PROCESSES

FIELD EXPERIENCES WITH A PILOT PHYSICAL-CHEMICAL TREATMENT PLANT

Walter W. Schuk
Environmental Protection Agency, 5000 Overlook Avenue S.W., Washington, DC 20032

INTRODUCTION

The automation of process monitoring and control has played a major part in research performed at the EPA-DC Pilot Plant in Washington, DC. Pilot plant instrumentation includes conventional analog controls and sensors, on-line wet chemistry analyzers, and a sensor-based digital computer (IBM S/7).

A recent pilot plant study compared the effects of manual, analog, and digital process control strategies on the operating cost and product quality of a sewage treatment process. The pilot plant physical-chemical system, with programmed diurnal flow variation, was selected for this study.

PROCESS DESCRIPTION

The pilot plant physical-chemical process consisted of screening, two-stage (pH 11.5) lime precipitation with intermediate recarbonation, dual-media filtration, breakpoint chlorination, and downflow granular carbon adsorption. The process was designed for a nominal capacity of 50,000 gpd with an optional diurnal variation of 3:1 maximum to minimum flow.

Test Procedure

The process was operated for three sequential two-week periods. The process was controlled manually by pilot plant operators for the first operating period, automatically controlled by analog controllers for the second operating period, and controlled by a sensor-based digital computer for the third operating period. Grab samples of the influent and effluent of each stage of the process were collected and composited by pilot plant operators. Daily laboratory analysis of organic carbon, phosphorus, and nitrogen concentrations produced process loading and removal efficiency data for the three operating periods. Chemical usage was calculated by manually measuring the volumes of solutions removed from the chemical feed tanks each day.

Control Description

The control strategies applied can be divided into two basic groups: those that are flow-proportional with manual updating such as flocculant aid addition or sludge wasting, and those that are flow-proportional with on-line sensor-based feedback updating such as pH control or free chlorine control. In the presence of diurnal flow variation, manual or sensor-based feedback control of the process could not be accomplished without automatic flow proportioning.

With the exception of breakpoint chlorination, the feedback control signals were developed by analog proportional-integral controllers or the digital equivalent of proportional-integral control produced by the sensor-based digital computer. For control of breakpoint chlorination, feedforward NH_3 proportioning was added to the analog control algorithm, and a steady-state control equation was used for digital operation.

RESULTS

The product quality produced by the three control methods indicated only a marginal difference in favor of automatic controls for the operating periods studied.

Due to an extreme change in the influent water characteristics caused by extended heavy rainfall during one portion of the study, direct comparison of chemical usage for the three control modes was impossible. As an alternate to measuring the actual volume of chemicals dispensed, the deviation of the controlled variable from the set point was analyzed to estimate the probable cost effect. With the exception of breakpoint chlorination, both automatic control strategies used approximately 10% less chemicals than the manual strategy to maintain the system.

At the time this test was performed, the digital control equation for breakpoint chlorination was designed for steady-state process flow. Linear flow-proportioning was added to the

equation to compensate for diurnal flow during the test. Later testing of the breakpoint process showed a non-linear response to flow changes (probably caused by changes in mixing energy). As a result, the digital control mode provided the poorest operation of the three control modes tested. While flow changes also caused upsets during manual and analog control, recovery was much faster than with digital control.

The manpower required to operate and maintain the physical-chemical process, excluding solids handling, was significantly greater for manual control. For either analog or digital control, 24-hour operation of the pilot plant process required approximately 12 hours per day of operator time, and 8 hours per day of maintenance time. For manual operation, operator time increased to 36 hours per day, and maintenance time decreased to 4 hours per day. The net difference of 20 hours per day was a 100% increase in manpower to produce an equal product quality.

CONCLUSIONS

The development of automation in physical-chemical process control has both improved process operation and increased process maintenance problems. The best control algorithm cannot improve a process when supplied with inaccurate or unreliable data, nor can optimum results be expected when final control elements malfunction or change characteristics. Present knowledge of breakpoint chlorination is inadequate to develop an optimum control equation for this process; however, for other processes, proven, viable control strategies were not implemented because of inconsistent on-line sensor data. For example, the lime feed control strategy could not be used until the original pH monitoring system and the lime feed system were replaced with equipment of different design. Prior to these changes, the excessive maintenance time required, and process upsets caused by equipment failures, precluded automatic pH control of the lime clarification process.

Equipment failure not only impacted process operation but also complicated process research efforts. To date, most process evaluation has depended on manual data analyses and long-term operation to overcome the lack of reliable on-line information. It seems futile to expend research effort on the cost-effectiveness of automation, or the impact of automation on product quality and reliability, when the data produced by on-line sensors cannot be accepted as reliable.

It is also frustrating to put forth the maintenance effort necessary to produce reliable automatic process control and then evaluate control effectiveness by manual analysis of grab or composite samples, made hours or even days after the samples were collected.

To simply ask manufacturers for reliable instrumentation is equally futile. At present, consistent specifications for sewage treatment instrumentation are non-existent. Typically, they include some blend of the electrical code, the plumbing code, and the whim of the originating engineer.

RECOMMENDATIONS

The process just described required accurate, reliable measurement of four parameters for optimum process control: flow, pH, free chlorine and ammonia, and the ability to accurately dispense four chemicals: lime, carbon dioxide, chlorine and caustic soda. To expand this process to full-scale operation, improvements should be made in most of the equipment just named, and the breakpoint chlorination control strategy must be improved.

Although recent improvements in flow metering may have improved the reliability of flow measurement, as yet there is no documented method of checking large flow meters other than by shipping them to a test facility at considerable expense and lost time. A self-cleaning pH assembly is needed to reduce both maintenance time and process upsets caused by fouled electrodes. Both the free chlorine and ammonia analyzers are time-consuming, high-maintenance items. The throttling of chemical feeds by control valves and metering pumps must be linear and repeatable over a broad range (approximately 10:1) if flow-proportioning control is to be used. Few valves or metering pumps meet these standards. With the increasing incidence of power shortages, reduced line voltages are occurring more often. This results in equipment being operated under borderline conditions more often and for longer periods of time. To maintain process control accuracy and reliability, instrument power supplies must be improved.

As some areas must meet effluent quality standards for carbonaceous, phosphorus, and nitrogen contaminants, reliable on-line sensors must be developed that can measure these parameters in raw wastewaters and plant effluents.

One major problem exists that has not yet been mentioned. In order for automation to become an effective tool for wastewater treatment process control, it is mandatory that a program be implemented to recruit and train personnel to operate and maintain automated waste treatment systems. Without well-trained personnel, reliability in data evaluation and achievement of rigid process control will be impossible.

AUTOMATION OF PHYSICAL AND CHEMICAL PROCESSES

Thomas M. Keinath
Environmental Systems Engineering, Clemson University, Clemson, SC 29631

INTRODUCTION

Physical and chemical wastewater treatment processes have found application both in biological and physicochemical wastewater treatment systems. Although several of the P/C processes are primarily employed only in physicochemical process trains (chemical clarification and adsorption on activated carbon), most are commonly found in both types of systems; *e.g.*, gravitational sedimentation and chlorination. Accordingly, this treatise has not been limited solely to those processes commonly found in physicochemical treatment trains. All major physical and chemical wastewater treatment processes will be considered, with the exception of chlorination, which has been considered in detail in a companion paper by W. W. Schuk.

Minor physical treatment operations including flow routing and equalization, comminution, screening and degritting have also been omitted from this discussion. Automation or control of several purely chemical operations such as pH adjustment and recarbonation have purposefully not been considered herein because they have been routinely automated throughout the water and wastewater treatment industry.

It is to be noted, furthermore, that this treatise is not meant to be an exhaustive review of the pertinent literature. Rather, literature citations have been made only to illustrate the general scope of research that is currently being conducted.

CLARIFICATION AND THICKENING OF BIOLOGICAL SLURRIES

Present Practice and Current Research

Feed-forward control of the activated sludge process can be achieved only when a descriptive dynamic mathematical model for the process is available. For this system it is mandatory that the dynamic model for the aeration basin be coupled with a complementary dynamic model for the secondary settler. Development of time-dependent models for the aeration chamber has occurred primarily during the past six years. During this period these models have evolved to a relatively structured status. Nonetheless, they lack verification at both the pilot- and prototype-scale levels.

Dynamic models for the secondary clarifier/thickener have not yet attained this level of development. Further, none of the existing models have been used as part of the control strategies that currently are employed in full-scale systems. Control algorithms that recently have been used in practice generally focus on one of four control objectives: (1) ratio proportioning of the sludge recycle flow to the influent flow rate; (2) MLSS control; (3) F/M or PLI control; or (4) SRT control. The control action normally taken is to adjust the rate of recycle flow in response to some measured variable such as MLSS, TOC, or sludge blanket level in the secondary clarifier. Without reference to a dynamic model of the secondary clarifier, one cannot ensure that a specific control action will result in the desired response. This can be accomplished only when a dynamic model of the secondary clarifier/thickener is used to: (1) predict concentration of the biological solids in the underflow; (2) predict solids blanket height; and (3) predict the solids concentration profile in the settler in response to dynamic changes in the influent and underflow rates of flow and the influent solids concentration.

Any dynamic model of the secondary clarifier also must be able to predict the concentration of suspended solids in the overflow in addition to the three factors enumerated above. The first attempt to develop a dynamic model for continuous thickening was that of Bryant (1). Through application of the Kynch analysis of zone settling and considering that solids are transported to the bottom of a settler by bulk flow and gravitational sedimentation, the following expression was derived:

$$\frac{\partial C}{\partial t} = -\left(u + \frac{\partial G_s}{\partial C}\right)\frac{\partial C}{\partial z}$$

where,

z = vertical distance in settler
C = concentration of solids
u = bulk (downward) flow velocity
G_s = gravitational solids flux
t = time

Solution of the partial differential equation was effected through spatial lumping into ten ordinary differential equations. Bryant also incorporated an empirical relationship (2) to simulate the response of the clarification function of the secondary settler.

Alkema (3) provided a slightly different approach to dynamic modeling of the continuous thickening process. The model which he developed provided for the movement of concentration discontinuities between the predominant layers in the sludge blanket.

Tracy (4) and Tracy and Keinath (5) were the first to implement the lumped-parameter model for the entire clarifier both above and below the feed point. Furthermore, they were

the first to provide for laboratory verification of the dynamic model. They found that the model accurately predicted the response of the thickener to transient inputs for the underloaded case. Moreover, their model appeared to give an adequate representation of the dynamic response of the clarifier when it was overloaded, or when it was forced from an overloaded to an underloaded condition or vice versa.

Research Needs

(1) The existing dynamic mathematical model for the secondary settler must be modified to account for the movement of displaced water upward through the settler.

(2) A structured clarification model must be coupled with the continuous thickener model to enable prediction of effluent suspended solids levels. This must, of course, account for scour of biological solids from the sludge blanket into the effluent.

(3) The existing models have been developed in terms of one spatial variable (depth). These must be modified for geometrical effects; *e.g.* radial profiles in circular settlers and longitudinal profiles in rectangular settlers.

(4) Laboratory, pilot- and full-scale verification must be provided for the models.

SETTLING CHARACTERISTICS OF BIOLOGICAL SLUDGES

Background and Current Research

Solution of any dynamic model of the secondary clarifier/thickener can be achieved only when an appropriate expression for the relation dG_s/dC is available. Bryant (1), Alkema (3), and Tracy (4) obtained expressions for this term by experimentally determining a relation for the initial interfacial settling velocity as a function of the concentration of suspended solids. From this relation an expression for G_s vs. C was derived as detailed by Dick (6).

One recognizes, however, that in an activated sludge system the settling characteristics and, therefore, the term $\partial G_s/\partial C$ change continually. Consequently, if a dynamic model of the activated sludge process is to be fully useful from a control viewpoint, it is imperative that the expression for $\partial G_s/\partial C$ be updated continuously either by (1) off-line measurement of the settling properties of the biological slurry or (2) prediction of the settling properties by reference to various biological processes parameters. The latter approach is of course preferable as one can then formulate overall feed-forward control strategies that include the dynamics of sludge settling characteristics. Conversely, the former approach provides a means for feedback control.

A digital solids-liquid interface settling monitor has been developed by George (7) for the off-line measurement of the settling properties of biological slurries. The device, however, has not been subjected to field trials. Other approaches to on-line measurement of settling characteristics have yet to proceed beyond the conceptual stage.

Considerable research has heretofore been directed toward determining the biological factors that affect sludge settling relationships, both clarification and thicking. These have focused on delineating the effects of organic loading and oxygen tension on sludge settleability and on effluent clarity.

Lesperance (8), Logan and Budd (9), Stewart (10), Bisogni and Lawrence (11) and Chao (12) showed that for conventional air activated sludge systems several optimum ranges of organic loading intensities (F/M or PLI) existed with respect to sludge settleability. At very high and intermediate PLI's sludge settleability was observed to deteriorate due to filamentous and zoogleal bulking, respectively. Similar studies on high-purity oxygen systems conducted by Jewel *et al.* (13), Okum (14), Chao (12), and Albertsson *et al.* (15) showed that the sludge settling characteristics were materially better than for conventional air systems. Chao's studies showed, furthermore, that the sludge settleability for the high-purity oxygen system was relatively constant over the entire PLI spectrum and was not subject to either zoolgleal or filamentous bulking.

The effects of biological factors on clarification efficiency were also investigated by Chao (12). His studies showed that the suspended solids concentration in the overflow of the secondary clarifier increased with increasing organic loading intensities. In contrast, his studies on high-purity oxygen activated sludge systems showed that the clarification efficiencies were materially poorer than for conventional air systems.

It must clearly be recognized that virtually all studies conducted regarding the effects of biological factors on sludge settleability and effluent clarity were conducted under pseudo-steady state conditions. Consequently, these studies can only be employed to indicate trends. Essentially no studies have been conducted relative to the dynamics of settleability and the clarification of biological suspensions *vis-à-vis* various process parameters. One notable exception is the work of Chudoba, *et al.* (16-18) who studied the effect of microbial population dynamics on sludge settleability in systems that were operated at steady state with respect to input conditions, but were operated under different mixing conditions. While their results were inconclusive, they were able to demonstrate certain interesting trends in sludge settleability as a function of population dynamics. Moreover, they qualitatively determined that the propagation of filaments proceeded much more rapidly than their suppression.

Research Needs

(1) Various off-line and on-line approaches for determining by experimental measurement the expression for $\partial G_s/\partial C$ must be developed and evaluated.

(2) A quantitative dynamic relationship must be established between the clarification and settling characteristics of activated sludge and the process parameters.

PRIMARY CLARIFICATION

Current Research on Clarifier Dynamics

Bryant *et al.* (19), in their transient simulation of a wastewater treatment plant, employed a "hybrid" clarifier model. The model employed a correlation of the fraction of suspended solids removed in a full-scale clarifier versus overflow rate to yield the solids separation (essentially a steady-state model) while assuming a number of completely-mixed tanks in series to provide the time response. Provision was made for sludge hold-up in the clarifier, although the solids concentration in the sludge and the withdrawal rate were not taken as functions of the hold-up. More recent transient simulations of wastewater treatment plants by Naito (20) and Johnson and Yang (21) employed steady-state models for clarifiers, neglecting, without justification, their contribution to the transient behavior. One might conclude, therefore, that primary clarifier models that are employed as part of overall dynamic treatment plant models are primitive at best. The reason that physical phenomena associated with clarifier dynamics are not considered is probably because they are not understood.

Steady-state operation of clarifiers has been studied extensively. For the sizing of clarifiers a plug-flow model proposed by Camp (22) is often employed to calculate the vessel surface area. Because the plug-flow model is not realistic, investigations in recent years have ranged from measurements of mixing [*e.g.* Wills and Davis (23), Murphy (24)], to research into the causes of mixing [*e.g.* Fitch and Lutz (25), Takamatsu and Naito (26)], to the development of performance models allowing for mixing.

One of the earliest models proposed for primary clarifiers is that of Hazen (27). Much of the recent research that has been directed toward dynamic model development has been conducted by Silveston and co-workers (28-32). Their approach has been to apply stochastic methods and power spectrum analysis to primary clarifier dynamics. Smith (33) also has provided a stochastic model which is based on flow rate and the clarifier surface area.

Current Research on Chemical Clarification

Convery *et al.* (34) have described extensive studies on automation of the lime clarification process at EPA's Blue Plains Pilot Plant. The studies focused on four potential control schemes: (1) conductivity-ratio, (2) flow-proportional, (3) pH feedback trim plus flow-proportional, and (4) alkalinity feedback trim plus flow-proportional. Although the latter control scheme provided the best results, it was judged unsuitable for general application because of difficulties encountered in maintaining the alkalinity sensing system. The pH feedback trim plus flow-proportional system was recommended for general use. In similar pilot-plant studies conducted at the Cleveland-Westerly Wastewater Treatment Facility (35), simple pH feedback control was employed.

Each of the control schemes detailed above provide for control only of the chemical dosing function. No control is provided specifically for an effluent quality parameter, *e.g.*, suspended solids or soluble orthophosphate concentration. To accomplish this, one would first need to mathematically characterize the chemical precipitation and chemical coagulation/flocculation processes and then would need to couple these with a suitable dynamic model for the primary clarifier.

The same approach would be required in the case of chemical clarification using either aluminum sulfate or ferric chloride. For these cases, however, it would be much more difficult to properly describe the chemistry and chemical interactions of the system. Perhaps the most feasible control algorithm would be one of the following simplified strategies:

(1) flow-proportional with pH feedback trimming—where the chemical feed and pH set points would be routinely updated using off-line jar coagulation studies.
(2) mass proportional to suspended solids with pH feedback trimming.
(3) mass proportional to soluble orthophosphate with pH feedback trimming.

Research Needs

(1) Development of a comprehensive dynamic mathematical model of primary clarification.
(2) Development of a simplified but realistic dynamic model of the chemical precipitation and chemical coagulation/flocculation processes (pH-dosage domain).

FILTRATION

Present Practice

Automation of the deep-bed filtration process has not advanced materially beyond what has been common practice in the water treatment industry for several decades. Control schemes that are currently employed in practice generally relate to two functions: (1) backwash initiation; and (2) influent flow splitting.

Four different backwash initiation control modes were described by Convery, *et al.*, (34). These modes, which were evaluated at the Blue Plains Pilot Facility, included headloss, high-level (influent), programmed time interval, and manual. The headloss control mode consisted of a headloss sensor which initiated the backwash cycle when the headloss across the filter bed exceeded a preset value (*e.g.*, 9 feet of water). Control using the high-level scheme was accomplished through the use of a high-level controller which served to open the effluent control valve so as to maintain a constant level of water above the filter. When the effluent control valve had been opened entirely, the backwash cycle was initiated. For these two modes, time-delay circuits prevented the premature triggering of the backwash cycle due to accidental or momentary events.

The programmed time-interval controller simply initiated the backwash sequence after the expiration of a preset number of operating hours. An operator manually changed the operating time set-point depending either on the flow rate through the plant or the rate of headloss build-up. Convery, *et al.* (34) concluded that the programmed time-interval control mode with a back-up headloss indicator alarm (which prevented flooding when system upsets caused increased solids loading) and a high-level alarm (which indicated equipment failure) provided for peak operating efficiency at the lowest possible operating cost.

At the Cleveland Westerly Advanced Wastewater Treatment Facility (35) individual filter backwash sequencing will be accomplished by continuously sensing and scanning filter headloss and filter effluent turbidity for each of the filters in operation. When either of these values exceeds a set-point, the backwash sequence for the critical filter(s) will be sequentially initiated according to the incoming error signals. Convery, *et al.* (34) emphasized, however, that turbidity could not properly be used as a control criterion because changes in clarifier efficiency resulted in marked changes in filter effluent turbidity.

Apportionment of influent flow between the operating filters was accomplished at the Blue Plains facility (34) by a mechanical splitter box which equally distributed the flow to each of the filters. At the Cleveland Westerly facility the influent will be apportioned among the operating filters so as to minimize the overall headloss.

Current Research

Much of the current research relative to the automation of deep-bed filtration has been directed toward the development of descriptive dynamic models for the process. The majority of the developments in this research area have been contributed by Ives and co-workers (36-44) although Deb (45) has also been active in the development of a dynamic model of the process. Qualitatively, these models provide for description of headloss and breakthrough turbidity as a function of time, based on measurements of a variety of parameters that characterize the filter media and influent turbidity.

None of the dynamic models have yet been fully verified for suspensions of particulates found in wastewaters, although Payatakes, *et al.* (48) and Mehter, *et al.* (49) have conducted laboratory experiments toward this end. When this is accomplished, however, the dynamic models could be employed in a feedforward manner to determine optimal control strategies which will maximize filter run times, thereby minimizing backwash water requirements and recycle flows. The filtration model, of course, should be coupled with the primary (chemical) clarification model because of the strong interactions between them. A preliminary effort in this regard was conducted by Kriegsman (46) who coupled the models of Bryant, *et al.* (19) for the primary clarifier and Diaper and Ives (44) for the deep-bed filter to simulate the performance of, and the interactions between, these processes.

Research Needs

(1) The existing dynamic mathematical model for the deep-bed filtration process must be adapted for the filtration of suspensions of wastewater particulates.
(2) The deep-bed filtration model must be coupled with the primary clarification model.
(3) Laboratory-, pilot-, and full-scale verification must be provided for the coupled dynamic models.
(4) Control strategies using the coupled clarification-filtration models must be developed.
(5) Backwash supervisory control strategies must be developed to prevent cascading and minimize effluent deterioration effects during periods of high flow and to minimize backwash water storage requirements for periods of low flow.

ADSORPTION

Present Practice and Current Research

In practice (34, 35) the adsorption process has been controlled in essentially the same fashion as has filtration. That is, control has been exerted only with respect to distribution of flow to the adsorbers and initiation of the backwash sequence. At the Cleveland Westerly plant (35), furthermore, an activated carbon column that is exhausted, as determined by TOC measurements on the influent to and effluent from the column, will be automatically removed from operation for spent carbon discharge and refill with regenerated and virgin make-up activated carbon. Removal and refill operations will be automatically sequenced, monitored, and controlled.

Research conducted on automation of the adsorption process has been directed primarily toward dynamic mathematical modeling. Keinath and Weber (47) were the first to provide a simplified dynamic model of the process when used for the removal of organic contaminants from wastewaters. Under contract to the Environmental Protection Agency, Tien and associates (48-51) developed a structured dynamic model which attempted to account for the adsorption of soluble organics, the filtration of particulates, and the biodegradation of both soluble and particulate organics in a packed-bed activated carbon adsorber. Due to the complex interactions between the adsorption, filtration, and biodegradation functions, this dynamic model only very qualitatively represents columnar adsorption dynamics. For municipal wastewaters, it is questionable whether a fully quantitative dynamic model can realistically be developed or whether such a model, if developed, would be particularly useful from a control viewpoint. Because of the large damping capacity in columnar adsorbers, simple feedback control strategies may well be entirely satisfactory.

In the case of industrial wastewaters where chromatographic or reversible displacement effects are observed, however, a dynamic model is mandatory such that feed-forward control can be effected to prevent solute displacement. A preliminary dynamic model developed by Carnahan (52) semi-quantitatively simulates the chromatographic effects that have been observed in the field. Carnahan assumed that the filtration and biodegradation effects were negligible. For many industrial wastewaters this assumption is realistic.

Research Needs

(1) The dynamic model which incorporates the adsorption, filtration, and biodegradation functions should be verified at either the pilot- or full-scale level.
(2) The dynamic model which accounts for chromatographic effects should be verified at either the pilot- or full-scale levels and appropriately refined.
(3) Control strategies using both of the dynamic mathematical models should be formulated.
(4) Simple feedback control strategies for adsorbers in municipal wastewater treatment systems should be formulated. For example, the treatment objective might be to minimize carbon loading rates while meeting effluent standards. This could be achieved by by-passing a portion of the flow around the carbon contactors and blending it with the effluent from the contactors to produce the desired quality. These studies should be conducted on a full-scale level to establish the operational cost benefits that might be experienced through application of this control strategy.

OVERALL CONTROL STRATEGIES

Another significant research need is the coupling of dynamic models for individual processes into an overall dynamic model for an entire physicochemical wastewater treatment facility. Such a model could subsequently be used to explore control strategies for the entire plant. As indicated above, Kriegsman (46) coupled the primary clarification and filtration processes as a preliminary effort in this direction.

REFERENCES

1. Bryant, J. O., Jr., "Continuous Time Simulation of the Conventional Activated Sludge Wastewater Renovation System," Ph.D. Dissertation, Clemson University, Clemson, SC (1972).
2. Pflanz, P., "Performance of (Activated Sludge) Secondary Sedimentation Basins," *Advances in Water Pollution Research* (Jenkins, S. H., ed.), Pergamon Press, New York (1969).
3. Alkema, K. L., "The Effect of Settler Dynamics on the Activated Sludge Process," M. S. Thesis, University of Colorado, Boulder, CO (1971).
4. Tracy, K. D., "Mathematical Modeling of Unsteady-State Thickening of Compressible Slurries," Ph.D. Dissertation, Clemson University, Clemson, SC (1973).
5. Tracy, K. D. and Keinath, T. M., "Dynamic Model for Clarification and Thickening of Activated Sludge," Amer. Inst. of Chem. Engrs. Symposium Series, *Water 1973* (1973).
6. Dick, R. I., "Role of Activated Sludge Final Settling Tanks," *Jour. San. Engr. Div., Proc. Amer. Soc. Civil Engrs., 96*, 423 (1970).
7. George, D. B., "Ditital S/L Interface Settling Monitor," Special Development Report, Clemson University (1973).
8. Lesperance, T. W., "A Generalized Approach to Activated Sludge: Part III. Process Variants, Why They Occur," *Water Works and Wastes Eng., 2*, No. 7, 34 (1965).
9. Logan, R. P. and Budd, W. E., "Effect of BOD Loadings on Activated Sludge Plant Operation," *Biological Treatment of Sewage and Industrial Wastes. Vol I Aerobic Oxidation*, (McCabe, J. and Eckenfelder, W. W., eds.), Reinhold Publ. Co., New York (1956).
10. Stewart, M. J., "Activated Sludge Process Variations, The Complete Spectrum: Part III. Effluent Quality–Process Loading Relationships," *Water & Sew. Works, III*, R-260 (1964).
11. Bisogni, J. J., Jr. and Lawrence, A. W., "Relationship Between SRT and Settling Characteristics of Activated Sludge," *Water Res., 5*, 753 (1971).
12. Chao, A. C., "Destabilization of Activated Sludge Suspensions with Ferric Chloride: Clarification and Thickening," Ph.D. Dissertation, Clemson University, Clemson, SC (1973).
13. Jewell, W. J., Eckenfelder, W. W. and Cavalier, M. E., "The Use of Pure Oxygen for the Treatment of Brewery Wastes," *Proc. 26th Ind. Wastes Conf.*, Purdue University (1971).
14. Okun, D. A., "System of Bio-Precipitation of Organic Matter from Sewage," *Sew. Works Jour., 21*, 63 (1949).
15. Albertsson, J. G., McWhirter, J. R., Robinson, E. K. and Vahldieck, N. P., "Investigation of the Use of High Purity Oxygen Aeration in the Conventional Activated Sludge Process," FWQA, Water Poll. Control Res. Ser. 17050 DNW (1970).
16. Chudoba, J., Ottová, V. and Madera, V., "Control of Activated Sludge Filamentous Bulking–I. Effect of Hydraulic Regime or Degree of Mixing in an Aeration Tank," *Water Res., 7*, 1163 (1973).
17. Chudoba, J., Grau, P. and Ottová, V., "Control of Activated Sludge Filamentous Bulking–II. Selection of Microorganisms by Means of a Selector," *Water Res., 7*, 1389 (1973).
18. Chudoba, J., Blaha, J. and Madera, V., "Control of Activated Sludge Filamentous Bulking–III. Effect of Sludge Loading," *Water Res., 8*, 231 (1974).
19. Bryant, J. O., Jr., Wilcox, L. C. and Andrews, J. F., "Continuous Time Simulation of Waste Water Treatment Plants," Presented at the AIChE National Meeting, Cincinnati (1971).
20. Naito, M., "Dynamic Model for Wastewater Treatment Plant," Presented at Fourth Joint AIChE/CSChE Meeting, Vancouver (1973).
21. Johnson, A. I. and Yang, J. T., "Computer Simulation and Control Studies for a Sewage Plant," Presented at Fourth Joint AIChE/CSChE Meeting, Vancouver (1973).
22. Camp, T. R., "Sedimentation and the Design of Settling Tanks," *Trans. Amer. Soc. Civil Engrs., 111*, 895 (1946).
23. Wills, R. F. and Davis, C., "Flow Patterns in a Rectangular Sewage Sedimentation Tank," *Advances in Water Pollution Research, 2*, 335 (1962).
24. Murphy, K. E., "Tracer Studies in Circular Sedimentation Basins," *Proc. 18th Ind. Wastes Conf.*, Purdue University (1963).
25. Fitch, E. B. and Lutz, W. P., "Feedwells for Density Stabilization," *Jour. Water Poll. Control Fed., 32*, 147 (1960).
26. Takamatsu, T. and Naito, M., "Effects of Flow Condition on the Efficiency of a Sedimentation Vessel," *Water Res., 1*, 433 (1967).
27. Hazen, A., "On Sedimentation," *Trans. Amer. Soc. Civil Engrs., 53*, 63 (1904).
28. Silveston, P. L., "Computer Simulation of Waste Treatment Plants," Presented at the ACS/CIC Symposium on Pollution Problems of Our Environment, Toronto (1970).
29. Silveston, P. L., "Simulation at the Mean Performance of Municipal Waste Treatment Plants," *Water Res., 6*, 1101 (1972).
30. Singh, D. P., Bryson, A. W., Jr. and Silveston, P. L., "A Stochastic Model for Primary Settlers," *Proc. 5th Annual Symp. on Water Poll. Res.*, Waterloo, Ontario, Canada (1970).
31. Sakata, N. and Silveston, P. L., "Exponential Approximation for Settling Rate," *Water Res.* (In Press).
32. Sakata, N., Cordoba-Molina, J. F. and Silveston, P. L., "Studies on the Application of Power Spectrum Analysis to Primary Clarifier Dynamics," Presented at the 9th Canadian Symposium on Water Pollution Research (1974).
33. Smith, R., "Preliminary Design and Simulation of Conventional Wastewater Renovation Systems Using the Digital Computer," Water Poll. Control Res. Ser. Publ. WP-20-9 FWPCA, Cincinnati, OH (1968).
34. Convery, J. J., Roesler, J. R. and Wise, R. H., "Automation and Control of Physical-Chemical Treatment for Municipal Wastewater," in *Applications of New Concepts of Physical-Chemical Wastewater Treatment*, (Eckenfelder, W. W. and Cecil, L. K., eds.), Pergamon Press, New York (1972).
35. Zurn Environmental Engineers, "Westerly Advanced Wastewater Treatment Facility: Process Development and Preliminary Engineering Design," Zurn Environmental Engineers and Battelle Memorial Institute (1972).
36. Ison, C. R. and Ives, K. J., "Removal Mechanisms in Deep-Bed Filtration," *Chem. Engr. Sci., 24*, 717 (1969).
37. Ives, K. J., "Rational Design of Filters," *Proc. Inst. Civil Engrs., 16*, 189 (1960).
38. Ives, K. J., "Simulation of Filtration on an Electronic Digital Computer," *Jour. Amer. Water Works Assn., 52*, 933 (1960).
39. Ives, K. J., "Simplified Rational Analysis of Filter Behavior," *Proc. Inst. Civil Engrs., 25*, 345 (1963).
40. Ives, K. J. and Sholji, I., "Research on Variables Affecting Filtration," *Jour. San. Engr. Div., Proc. Amer. Soc. Civil Engrs., 91*, 1 (1965).
41. Ives, K. J., "The Use of Models in Filter Design," *Effl. & Water Trt. Jour., 6*, 522 (1966).
42. Ives, K. J., "Advances in Deep Bed Filtration," *Symposium on Advances in Filtration*, Inst. of Chem. Engrs., Manchester (1968).
43. Ives, K. J., "*Theory of Filtration*," Special Subject No. 7, International Water Supply Congress, Vienna (1969).
44. Diaper, W. J. and Ives, K. J., "Filtration Through Size-Graded Media," *Jour. San. Engr. Div., Proc. Amer. Soc. Civil Engrs., 91*, 89 (1965).
45. Deb, A. K., "Theory of Sand Filtration," *Jour. San. Engr. Div., Proc. Amer. Soc. Civil Engrs., 95*, 399 (1969).
46. Kriegsman, G. R., "Simulation of the Dynamics of Clarification and Filtration," M. S. Special Problem Report, Clemson University, Clemson, SC (1973).
47. Keinath, T. M. and Weber, W. J., Jr., "A Predictive Model for the Design of Fluid-Bed Adsorbers," *Jour. Water Poll. Control Fed., 40*, 741 (1968).
48. Payatakes, A. C., Turian, R. M. and Tien, C., "Integration of Filtration Equations and Parameter Optimization Techniques," Research Report 70-4, Syracuse University, Syracuse, NY (1970).
49. Mehter, A. A., Turian, R. M. and Tien, C., "Filtration in Deep Beds of Granular Activated Carbon," Research Report 70-3, Syracuse University, Syracuse, NY (1970).
50. Hsieh, J. S., Turian, R. M. and Tien, C., "Experimental Investigation of the Adsorption of Organic Contaminants in Waste Water on Granular Activated Carbon," Research Report 69-1, Syracuse University, Syracuse, NY (1969).
51. Hsieh, J. S., Turian, R. M. and Tien, C., "Batch Adsorption Kinetics with Chemical Reaction," Research Report 69-2, Syracuse University, Syracuse, NY (1969).
52. Carnahan, R. P., "Mathematical Modeling of Heterogeneous Sorption in Continuous Contactors for Wastewater Decontamination," Ph.D. Dissertation, Clemson University, Clemson, SC (1973).

DISCUSSION

Robert A. Ryder:

Would Mr. Schuk please comment on the type of ammonia measurement and sensing system utilized, and its reliability?

In connection with breakpoint chlorination, was there any attempt to control overdosage of chlorine, to minimize wastage as well as the effect of excess residual on the sorption capacity of the granular activated carbon filters?

Robert H. Wise:

We in the municipal wastewater treatment field tend to believe that most of the many novel sensors and instruments needed to implement WWTP automation will almost automatically be forthcoming from instrumentation suppliers once a need for such devices has been conclusively shown. I have discussed this "philosophy" with representatives of many instrumentation manufacturers, **all** of whom assured me that this prevailing concept is false. Mr. Russell Babcock has already commented on this topic.

Once the need for a particular sensor or instrument has been conclusively shown, development of a reliable "device" to fill this need **in the hostile environment of a sewage treatment plant** requires years of intensive research and development. Therefore, if we postpone development of such devices (using the rationale that such equipment might not be really needed at some future date), we thereby throw away lead time corresponding to the developmental time required to reduce sensor **concept** (or instrument concept) to **practice**. Typically, such lead time is 4 to 8 years*. Can we afford this?

*Example Lead Times for Development of Existing Devices
1) On-line TOC analyzer: about 8 years
2) On-line polarographic DO probe: about 10 years
3) On-line glass electrode: about 10-15 years
4) On-line NH_3 probe: after 3 years, still not acceptable for on-line use.

L. A. Schafer:

In the automation of continuous processes, the development of new instruments usually occurs in three interacting phases, performed by three separate and distinct groups. The first phase (innovation) carries the basic idea through bench-scale testing. The second phase (development) transforms the concept into marketable hardware. The third phase (application) adapts the instrument to its proper function by modification and the addition of sub-systems. A prime example is the development of the gas chromatograph, where the three phases were worked out by chemists and other researchers, instrument manufacturers, and industrial users, respectively. No one group was capable of producing a working instrument; all three performed their function and interacted to develop an effective machine.

In the municipal wastewater field, the first two groups are generally available, but there is no one with the ability, motivation, and funding to perform the third function. As has been pointed out, instrument manufacturers have little incentive to put their funds into application. In the treatment facilities themselves, there are no funds for such work, the operating staff has no motivation, and the one possible innovation group, the analysts or technicians, are trained toward invention and laboratory work and are therefore conditioned toward the innovative phase, rather than the necessary and different application effort.

Application, like innovation and development, is almost never achieved by any one single group, no matter what the capability or motivation. Technology transfer is effective only when it involves the user, or the person who has to live with the results. Instrument application by salesmen, design engineers and consultants has, all too often, led to dismal and expensive failures, with the taxpayer taking the loss.

It would seem, therefore, that to develop instruments such as nutrient meters (TOC, BOD, respirometers, and the like) or suspended solids meters, a group or groups must somehow be established to promote attempts at application, evaluate the results, disseminate and promote the findings, and encourage the selection and adoption of proven instrument systems.

(The word instrument refers to many classes of devices. In this case I am talking about process-type instruments, suitable for continuing service for automatic control. I am particularly excluding laboratory instruments.)

John F. Andrews:

It would appear to me that many of our problems with sensors could be reduced by using simple, on-line recalibrations and performing these more frequently. Has anyone had any experience with techniques suitable for on-line calibration of large flow meters?

Robert H. Wise:

On-line (in-place) calibration of flow meters, regardless of size, can be accomplished relatively easily with fluorimetric tracer techniques. Equipment and/or procedures for making such measurements can be obtained from Turner Designs, Palo Alto, Calif. Mr. Ron Doty (one of the participants in this workshop) has had first-hand experience with this calibration technique and with some of Turner Designs' flow-calibrating equipment; his comments on both were favorable.

P. M. Berthouex:

Mr. Schuk spoke of many problems with on-line sensors. I agree that to **demonstrate the feasibility** of on-line control you need (a) working hardware, (b) a usable control algorithm, and (c) performance data. To **learn about process dynamics**, however, we need performance data, preferably data taken

during controlled experiments. We need more of this kind of data and we need to properly analyze such data. Data may be collected manually or by any other convenient means, and methods are available to fit such data in an attempt to derive the dynamic model, to identify the control problem, and to design the control algorithm. This approach, to which George E. P. Box at the University of Wisconsin has contributed substantially, has the advantage of minimizing the need for assumptions about mechanism, although known mechanisms can and should be incorporated. Basically it lets the process tell its own story.

Aside from the data analysis for which alternatives exist, I should like to encourage more effort toward manual collection of data since heavily instrumented plants are not yet common. We can learn some things about automation and control without having automated plants, if we have the energy to do the data collection necessary.

Harry Fertik:

By developing and using scientific models one can learn how various physical and chemical phenomena produce process behavior, but scientific models are of limited usefulness in developing and testing real-time control strategies. For example, in developing computer control algorithms for cement kilns more than a decade ago, the initial effort was placed in writing a scientific description of the process dynamics. This work was dropped when it became clear that the model, although complex and of high order, still would not exhibit the behavior familiar to plant operators (material buildup into "rings" in the kiln producing a typical temperature behavior, etc.). The control strategy was developed from input-output analysis using process measurements obtained from dynamic testing of the process. Low-order dynamic models that incorporate process stochastic behavior and nonlinear characteristics were the basis for this development. The control strategy was refined and initially tested on these models, with final testing on the process.

Optimization techniques have been applied to various classes of problems with varying degrees of success. They can be applied to design problems, the determination of steady state operating conditions of a plant and to the calculation of the dynamic response following a process disturbance or a setpoint change. Design optimization is an accepted, successful technique, and steady-state optimizers are working routinely in various industries to calculate setpoints, but control design by dynamic optimization in process industries has not in general resulted in control system performance with any significant improvement over conventionally designed control systems.

Richard I. Dick:

Much of the discussion at this conference relates to the conflict between complex theoretical models and practical control procedures. A middle ground in some cases would be to modify the design and/or operation of processes to make them conform to the theoretical model. This sounds like idealism, but in some cases it may be realistic. An example is in the design of sedimentation basins. The theoretical analysis of steady-state thickening in basins such as the final settling tank in the activated sludge process is well established, and the performance of closely controlled laboratory units conforms well to the theoretical predictions. Parallel measurements with full-scale tanks indicate that they often perform far less satisfactorily than is theoretically possible. Professor Keinath has correctly suggested a need for modifying theoretical predictions in comparison with the actual performance of real tanks. However, an alternative and more satisfying approach would be to change the design of sedimentation basins to make their performance approach that which is theoretically achievable. It would seem that sedimentation equipment manufacturers and design engineers might give some attention to the differences between the predicted and actual performance of their installations.

Harold D. Gilman:

The discussions so far appear to me to have focused too strongly on the computer application in process mathematical modeling. We should not neglect the basic computer capabilities of logging, reporting, data management, alarming, and its response to the information needs of operators, engineers, management, and maintenance.

Research should be undertaken on how to take advantage of the new dimensions of information processing and display, notably with the cathode ray tube, graphics and color—just start with improved and tailored information for operators.

Poul Sorensen:

In considering the needs for research, I think a point should be made about optimizing the chemical post-precipitation process.

In Scandinavia, alum is normally used in this process. Some provisional experiments carried out in Denmark have shown that a pH adjustment with sulfuric acid has improved the process in lowering the P content in the effluent from about 1 ppm to 0.2 ppm. The reason for this could be the high alkalinity in the wastewater, but the process requires further investigation.

John F. Andrews:

Physicochemical processes offer the advantage, in comparison with biological processes, of removing a greater percentage of pollutants from wastewaters. They should also be more amenable to variable-efficiency operation. However, their operating costs are usually higher than those for biological processes. These characteristics point to a potential research need, this being selection of the proper combination of biological and physicochemical processes for operating at a variable efficiency and interfacing with the time-dependent

requirements of the receiving stream.

For example, treatment by a biological process may be adequate for high flows in the receiving stream but inadequate during low flow periods. A proper time-dependent basis for plant operation might therefore be a biological process followed by a physicochemical process, with the proportion of the total flow treated by the physicochemical process being controlled in accordance with the flow rate in the receiving stream. An extension of this would be to regulate the proportion of flow going to the physicochemical process in accordance with the pollution load in the stream above the plant discharge. The ultimate application of this concept would be to use feedforward control of the flow proportioning, based on real-time computer simulation using a dynamic model of the stream below the point of discharge.

Report of Working Party on RESEARCH NEEDS FOR AUTOMATION OF PHYSICOCHEMICAL PROCESSES

Wesley W. Eckenfelder, Jr.
Professor, Environmental and Resources Engineering, Vanderbilt University, Nashville, TN 37235
John Stamberg
Office of Research and Monitoring, Environmental Protection Agency, Washington, DC 20460

INTRODUCTION

An extensive Advanced Waste Treatment research program sponsored by the Federal Water Pollution Control Administration during the 1960's delineated a variety of physical and chemical wastewater treatment processes that are capable of producing very high quality product waters. Subsequent demonstrations at pilot plants and small full-scale plants showed the utility of these processes, defined their respective operational parameters and provided economic data.

Automation of these physicochemical processes has for the most part been limited to studies conducted on a pilot scale under contract to the Environmental Protection Agency. Although these studies have defined several control strategies that apparently are applicable to full-scale systems, they have been evaluated only on a limited scale at small wastewater treatment plants. Because the process of automating any treatment system is an iterative procedure whereby strategies or algorithms are proposed and then repetitively evaluated and refined, it is clear that automation of physicochemical processes is yet in its infancy.

It is noteworthy, furthermore, that most physicochemical processes are not yet fully understood with respect to process variables and operational parameters. This is due to a lack of long-term operating experience at large wastewater treatment plants. Until such information becomes available, strategies directed toward optimal control cannot be formulated and the full potential of physicochemical processes for reliably producing high-quality product waters cannot be attained. Accordingly, it is apparent that research needs in the area of automation, instrumentation, and process control often cannot be divorced from process research needs.

Physicochemical processes considered by this working party include chemical clarification, filtration, adsorption, and nitrogen removal. Another extremely important application of a physical process, clarification and thickening of biological slurries, was considered as a primary subject by several other working parties and, therefore, was not included in the discussions of this group. Let it suffice to point out that great potential payout exists for automating activated sludge biological systems so as to optimize the performance of secondary clarifiers.

PROBLEM AREAS AND IDENTIFIED RESEARCH NEEDS

Relative to the automation of physicochemical treatment processes the following problem areas were delineated:

1. Although existing data on lime clarification would indicate that pH is the only parameter required to properly control the process, it is questionable whether such a control strategy is universally transferable to all geographic locations. For example, in areas where the carriage water is relatively soft, it may be necessary to add a polymeric flocculant to enhance solids-liquid separation. In such a case a simple pH control algorithm would not suffice and a more complex control strategy would be required.
2. Chemical clarification using either Al(III) or Fe(III) requires, at a minimum, control of both pH and

dosage of the chemical in response to the concentration of soluble orthophosphate, turbidity or suspended solids, and alkalinity. Even though the literature is replete with appropriate parametric relationships, the task of formulating, evaluating and refining a suitable control algorithm remains.

3. With respect to chemical clarification, furthermore, each of the control schemes evaluated heretofore have provided only for control of the chemical dosing function in response to a readily measured parameter such as pH. No scheme has been provided to control a specific effluent-quality parameter, *e.g.*, suspended solids or soluble orthophosphate concentration. To accomplish this, the chemical precipitation and chemical coagulation/flocculation processes would first have to be mathematically modeled. The resultant models would then have to be coupled with a suitable model for the primary clarifier. Until such an overall model is available, optimal control of the chemical clarification process cannot be established.
4. Automation of the deep-bed filtration process has not advanced materially beyond what has been common practice in the water treatment industry for several decades. Control schemes that are currently employed in practice generally relate to two fuctions: (1) flow splitting; and (2) backwash initiation. While these are very useful, they are not amenable to establishing optimal control algorithms. If descriptive dynamic models of the filtration process were available, they could be employed in a feedforward manner to determine optimal control strategies so as to maximize filter run times, thereby minimizing backwash water requirements and recycle flows. Such a dynamic model would have to consider filter loading, bed penetration, head loss, and effluent turbidity. Moreover, any filtration model would have to provide for prediction of the effects of adding a filter aid and be capable of controlling the dosing function.
5. Operation of a series of deep-bed filters that are part of wastewater treatment systems frequently is plagued either by cascading or effluent deterioration effects during periods of high flow. Conversely, during periods of low flow, backwash water storage requirements increase due to the lack of water which can be obtained from the main flow. Suitable backwash supervisory (executive control) strategies can materially enhance operation of deep-bed filtration systems by either preventing or minimizing the problems mentioned.
6. Although a dynamic mathematical model which describes the adsorption of organics in municipal wastewaters onto granular activated carbon was developed under an EPA contract, it has not been employed to evaluate the feasibility of alternative control strategies. For example, a treatment objective might be to minimize carbon loading subject to the constraint of meeting effluent standards. Using the existing model, this as well as other control alternatives could be evaluated.
7. Treatment of industrial wastewaters using granular activated carbon is commonly beset with problems of chromatographic displacement of adsorbed organics. Solute displacement can be prevented through the application of feedforward control using a descriptive dynamic model. A need exists, therefore, for the development of a dynamic model and for formulation of an appropriate feedforward control strategy.
8. Because adsorption contactors are generally designed and operated in a fashion analogous to deep-bed filters, considerations regarding cascading and effluent deterioration effects also apply. Accordingly, executive control strategies must be developed for adsorption systems as well.
9. Because of the lack of a complete understanding of process kinetics, removal of nitrogen from wastewaters either by air stripping, selective ion exchange or breakpoint chlorination cannot yet be reliably accomplished over the long term. This shortcoming can be resolved by a complete parametric description of these processes, by dynamically modeling the processes and then by developing and evaluating control strategies.
10. Process monitoring and control can only be accomplished if reliable sensors are available. Although many sensors required to automate physicochemical processes are available, the need exists to improve their reliability and to reduce the maintenance requirements. This is particularly important for the measurement of flow, pH, phosphorus, ammonia, and organic carbon (TOC, TOD, COD, etc.)

PRIORITIZED RESEARCH NEEDS

1. Develop and/or refine structured dynamic mathematical process models for:
   a. Lime clarification with or without addition of polymeric flocculants.
   b. Chemical clarification using either Al(III) or Fe(III).
   c. Deep-bed filtration of wastewaters (single or dual media).
   d. Adsorption of organics from municipal wastewaters.
   e. Adsorption of organics from complex industrial wastewaters.
   f. Removal of nitrogen from waste streams by either air stripping, selective ion exchange, or breakpoint chlorination.
2. Develop practical control strategies for process operation for each of the processes listed in 1. above.

3. Develop executive or supervisory control strategies for:
   a. Backwashing of a series of deep-bed filters.
   b. Backwashing of a series of adsorption contactors.
4. Evaluate process models and candidate control strategies on a pilot scale (Blue Plains) and subsequently at a full-scale wastewater treatment plant.
5. Improve reliability of flow, pH, phosphorus, ammonia and organic carbon sensors and reduce their respective maintenance requirements.
6. Couple dynamic models for individual processes into an overall dynamic model for an entire independent physicochemical wastewater treatment facility and subsequently explore and evaluate cost-optimal control strategies for the entire plant.

AUTOMATION OF SLUDGE PROCESSING, TRANSPORT & DISPOSAL

AUTOMATION OF SLUDGE PROCESSING, TRANSPORT AND DISPOSAL

Bart T. Lynam, Raymond R. Rimkus and Stephen P. Graef
The Metropolitan Sanitary District of Greater Chicago,
100 East Erie, Chicago, IL 60611

INTRODUCTION

The Workshop mission of defining research needs and establishing priorities in the area of wastewater treatment systems automation is a positive step toward improving facility operation. The benefits are especially germane to large municipal utilities such as the Metropolitan Sanitary District of Greater Chicago. In recent years it has been the District's experience that process automation, where feasible, yields the following benefits:

1. Performs routine tasks
2. Provides process information
3. Enacts control action decisions based on process status
4. Provides information for a planned maintenance program

These benefits in effect

- Enable the operator to cover larger service areas
- Improve process quality and stability
- Reduce capital and M & O costs

The District has either implemented or experimented with automation in all three areas of sludge processing, transport and disposal. The District's experience suggests that the area of sludge processing has more potential application for automation than does sludge transport and disposal. Transport and disposal operations are usually carried out by multiple, single-unit pieces of equipment mobilized over a broad territory and are thus more difficult to regulate automatically. The areas of sludge transport and disposal do have a serious need for basic development work of a general nature; however, this is beyond the scope of this workshop.

SLUDGE PROCESSING

The objective of sludge processing is to convert raw sludges, which are produced in wastewater treatment, into a form which can be disposed of in an environmentally compatible fashion. Raw sewage sludge production fluctuates somewhat proportionally to the changes in raw sewage flow rate. The amplitude is damped and out of phase compared to that of raw sewage flow rate variations, because of the dynamics of the settling and biological oxidation processes. Unfortunately, the discontinuous schedule for transferring sludges, which many plants follow, causes abrupt changes in volumetric and mass loading rates to sludge processing units. Equipment is available, such as variable speed pumps and surge tanks, which can smooth the volumetric loading rates to sludge processing units.

Fluctuations in mass loading, on the other hand, are more difficult to regulate. First of all the dynamics of few, if any, of the sludge handling processes have been experimentally tested on a full scale basis in the field. This is in spite of the fact that numerous dynamic studies on sludge processing have been performed on a pilot basis or by computer simulation techniques. These field studies are very important for implementing automatic control and should be undertaken. Secondly, solids concentration and/or sludge density have not been reliably measured on-line under long-term field conditions. Entrained gas, stringy materials, inadequate velocity gradients and grease coatings are several problems which invalidate the accuracy of measured solids concentration. Field testing and development is needed to make the sensors work. For example sensor redundancy, sensor orientation, and preconditioning of the sludge before meeting; *e.g.*, degasification and grinding should all be explored as means for improving the solids concentration measurements.

Research needs for implementing automation in the various types of solids handling processes are presented below. The needs outlined are primarily oriented toward automation of field units which process municipal sludges on an continuous basis.

Concentration

Sludge concentration is usually accomplished by two types

of thickeners, (1) gravity and (2) flotation. The research needs for these units are as follows:

Gravity Concentration

1. Perfect devices for automatic monitoring and control of underflow sludge concentration.
2. Develop a field-verified dynamic model for the gravity thickening process.

Flotation Thickening

1. Develop feedforward control of flocculant addition based, for example, on measured influent sludge concentration.
2. Perfect feedback trimming of polymer addition rate and pressurized recycle flow rate based on a process variable; *e.g.*, subnatant turbidity.
3. Develop a field-verified dynamic model for the flotation thickening process.

Dewatering

Municipal sludges may be dewatered mechanically via centrifuges, vacuum filters and filter presses, or by heat treatment. Control actions for mechanical dewatering involve either changes in mechanical settings and parameters or variation in the rate of sludge conditioner chemical addition. In most instances, chemical addition control can be adjusted more readily than mechanical control settings. Potential control actions for heat treatment include reactor residence time and reactor temperature. The research needs for mechanical dewatering and dewatering by heat treatment include:

Mechanical Dewatering

1. Develop feedforward and/or feedback control schemes for addition of chemical conditioners. The District, for example, controls ferric chloride addition to waste activated sludge based on the conditioned sludge pH. Other potential feedback control signals and sensors may be on-line viscometers monitoring the conditioned sludge stream and on-line turbidimeters monitoring the filtrate or centrate streams from these units.
2. Develop a reliable field measurement system for estimating solids concentration of sludge cakes.

Heat Conditioning

1. Refine a feedforward/feedback control system to regulate reactor temperature and residence time based upon influent total and volatile solids concentration. Several manufacturers have steady-state control systems and these could be augmented to provide dynamic control. Since the settling rate of heat treated solids is rapid, a settlometer could potentially be modified to obtain an effective feedback signal.

Combustion

Manufacturers of most wet and dry combustion processes have incorporated steady state control into their combustion systems. These systems may include feedforward control of thermal energy input, air input rates and reactor pressure, based on total and volatile solids loading rate measurements. Stack gas composition and temperature, ash content of the combustion residue and organic content of the recycle liquor measurements have been used for feedback trimming control. In general, equipment and technology for automatic regulation of combustion processes are more developed than for other sludge processing methods.

Heat Drying

Like other mechanical equipment for processing sludge, automatic regulation has also been incorporated into proprietary heat drying systems. Research needs for improving upon present techniques for the heat drying process are as follows:

1. Develop means for determining an on-line water balance around the reactor.
2. Develop an automatic control scheme for blending dry solids with feed sludge.
3. Formulate a dynamic control strategy for regulating energy utilization, stack gas quality and volatile content of the dried sludge.

Digestion

Plant scale automatic control of biological processes is practically non existent. There have been, however, several dozen pilot plant and computer simulation studies in which automatic control strategies have been formulated for these processes. These studies have indicated that both aerobic and anaerobic digestion appear suited for automatic control actions and the research needed to achieve implementation include the following:

Aerobic Digestion

1. Perfect sensor installations which yield reliable measurements for obtaining organic carbon or similar balances on a full scale reactor in the field.
2. Develop aeration or oxygen supply rate control techniques for plant scale digesters. Potential feedback control signals include off-gas composition from and dissolved oxygen concentration in the reactor. An aerobic digester could potentially be operated as a continuous flow respirometer with respiration rate governing the rate of aeration.
3. Develop a field-verified dynamic control model for the aerobic digestion process.

Anaerobic Digestion

1. Develop equipment and instrumentation systems which would automate accurate digester sludge feeding and withdrawal on a continuous basis. The system should be reliable when handling the heterogeneous materials in municipal sludges.
2. Automate digester stability evaluation based on measurements such as gas composition and flow, in-line

pH and short chain fatty acid concentration in the liquid phase.

3. Develop a feedforward off-line fermenter for screening the raw sludge for inhibitory characteristics.
4. Develop a field-verified dynamic control model for the anaerobic digester.

Composting and Air Drying

Sludge handling processes such as composting and air drying are not especially suited for automation. Both processes incorporate natural forces, have extended reaction times, and utilize mobilized solids handling machinery which are operated by one or more persons.

SLUDGE TRANSPORT

At the present state of the art, automation in the area of sludge transport may be applicable in only a few situations. The best suited areas for control implementation seem to be pipeline transport of sludge slurries and conveyor transport of sludge cake solids and dry sludge solids. Other transport methods such as barge, train and truck are not well suited for automation since control of such equipment requires direct human intervention. However, in moderate to large sludge transport operations which utilize barges, trains and/or trucks, a small computer or time-shared computer terminal can be very beneficial for

(a) Monitoring sludge shipment and storage
(b) Developing operations research models for simulating and evaluating sludge routing strategies
(c) Establishing a sludge management information system.

Pipeline Transport

The District has experimented with automatic control of pipeline transport both inside and outside of the plant. Automatic regulation of fluid flow can be very effective. The research needs to implement automatic control of sludge transport include the following:

1. Develop reliable apparatus and techniques for starting and stopping pumps, opening, modulating and closing valves and routing sludge through a network of piping based upon volume transferred and instantaneous flow rate.
2. Develop automatic control of sludge viscosity reduction techniques such as (a) high energy mixers for increasing the rate of shear and (b) addition of chemicals which reduce viscosity. On-line viscometers could serve as a feedback control sensor for regulating both mixer speeds and rate of chemical addition.

Conveyor Transport

Conveyors have been used extensively in the automatic mode for feeding dry chemicals to assorted unit processes. Feedback control of belt speed based upon belt scale measurements insures a desired mass feed rate. Additional work is needed to perfect sensing devices which estimate the moisture content of both sludge cake and dried sludge solids. Such a sensor could provide a feedback control signal for regulating the rate of sludge delivery on a dried solids basis.

SLUDGE DISPOSAL

Sludge disposal by land spreading, landfill or ocean disposal is not especially suited for implementing automatic control. Individual pieces of machinery and equipment used in sludge disposal may be equipped with some automatically controlled mechanisms but total automatic control has not been implemented. Although considerable research is needed in the broad area of sludge disposal few avenues for applying automatic control techniques seem available.

CONTROL OF SLUDGE HANDLING: SOME SUCCESSES AND PROBLEMS

J. B. Farrell
Chief, Ultimate Disposal Section, Advanced Waste Treatment Research Laboratory, National Environmental Research Center, Cincinnati, OH 45268

INTRODUCTION

Steady advances, dating back to the late 1930's, have been made in process control advances in instruments for measuring process variables as well as in control systems.

Instrument development has progressed beyond the measurement of primary variables such as pressure, temperature, and density, and instruments can rapidly measure complex properties such as flow rate of heterogeneous mixtures or composition of gas or liquid mixtures. Instrument development sometimes seems slow or inadequate because there are almost as many needs as there are processes. Complex properties must be measured: the quality of a bread dough, or the plastic and thixotropic behavior of a paint, or the filterability of a sludge. As the needs become more specialized, the economic motivation to instrument developers becomes

less because the numbers of potential installations are fewer. Nevertheless, the need exists, and improved control of complex processes depends on such developments.

The chemical and petroleum industries offer excellent examples of successful application of process instrumentation and control. Several factors have played a part in this development. Very often the materials that are processed are simple fluids. Almost always the feedstock is quite uniform in composition, the flow rate is held constant or is controlled at will, and the chemical reactions are straightforward. As understanding of the process steps diminishes or the feed or intermediate streams become complex fluids, control diminishes as well.

CONTROL IN WASTEWATER PROCESSING

Wastewater processing combines a number of factors that work against satisfactory control. Flows vary widely and unpredictably. Feedstock composition is poorly defined and fluctuates greatly. Process steps are poorly understood. Residue streams (sludges) that result are complex in physical and chemical characteristics. It is no surprise that wastewater processing, particularly sludge processing, has not seen extensive application of instrumentation and control systems. Some reasons are related to the nature of the "products", the scale of operation, and the interest of top management. The "products" of wastewater treatment do not return a profit, so there is little incentive to produce a superior product. Most plants are too small to justify instrumentation for optimum performance. Top management (the municipal authorities) is understandably more likely to be concerned about creative innovation in areas other than wastewater treatment.

SOME SUCCESSES

The most extensive and successful use of sophisticated control techniques in sludge processing is in sludge incineration. There have been very good reasons for this development. Incinerators work poorly and use excessive quantities of fuel when they are controlled manually, and manufacturers would have seen their business disappear under the combined onslaughts of a populace interested in clean air and strict air pollution codes. A second reason is that significant process variables can be measured accurately, and relationships between variables are well understood.

The manner in which excess air is controlled in a multiple-hearth furnace (MHF)* is illustrated in Figure 1. Control is exercised by pressure at the outlet of the furnace or by oxygen content of the cooled exhaust gas. In one mode, pressure is sensed at the furnace outlet and transmitted to a two-mode controller, which positions a damper in the exhaust line. When conditions have stabilized, control is manually transferred to the second mode of the controller. Oxygen content of the exhaust gas is measured and a proportional signal is transmitted

*Information on control systems has been obtained from the Envirotech Corporation. Mention of products or use of such information does not indicate EPA endorsement.

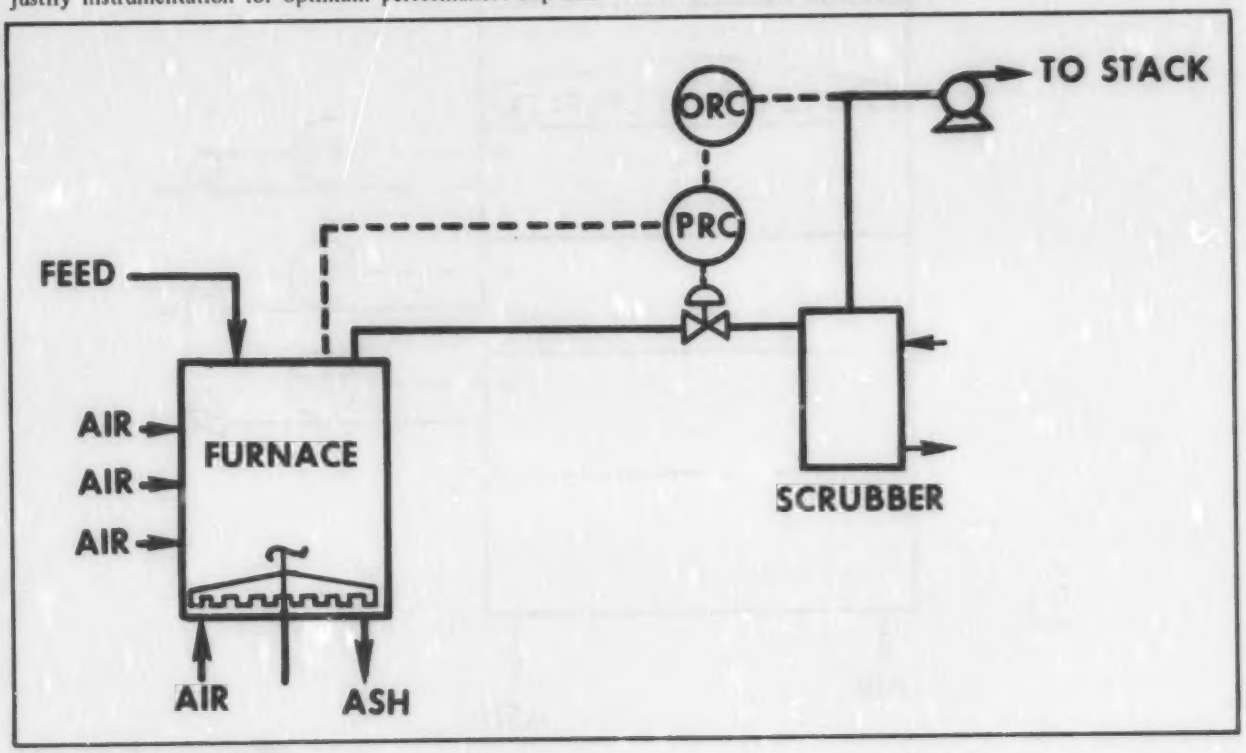

Figure 1. Draft Control for MHF.

to the controller, which controls the damper (and the exhaust gas pressure) to give the desired air flow and exhaust gas oxygen content. This is an example of cascade control.

Temperature on hearths is controlled by a conventional feedback circuit (Figure 2). Temperature is sensed, and if it is off the setpoint, the air flow rate is changed in the proper direction. A ratio controller changes fuel flow in proportion to air flow to give a constant percent excess air.

Variations in flow rate of solids can cause large fluctuations in the fuel requirements on the different hearths. For example, an increase in flow rate can cause the burning zone to travel down the furnace and start at a lower hearth; this would substantially change the fuel demand on the hearth. A feed-forward system has been devised (Figure 3) that increases the rabble arm speed as feed rate increases. The increased agitation of the rabble teeth exposes more surface, which tends to make the sludge start burning sooner. The two tendencies counterbalance each other, and the burning zone remains fixed.

Successful applications of instrumentation are not limited to incineration. Magnetic flow meters and sludge density gauges are used in open-loop control of sludge streams. Constant-displacement pumps and conventional pressure, temperature, and flow controls are used to achieve closed-loop control of the heat treatment process.

A DIFFICULT CONTROL PROBLEM

Some sludge handling processes and operations could be profitably controlled, but so far, satisfactory feed-forward or feedback control techniques have not been devised. One example is vacuum filtration. The operation is costly, so there is incentive to reduce costs. The major expense is the cost of chemical conditioner, which conceivably could be reduced by proper control procedures. The scale of operation is important. Some filters are too small to automate; they do not consume enough conditioning agent to warrant the cost of a control system. However, a 500-square-foot filter, which is a commonly used size, can process over 4,000 dry tons of sludge per year and can consume $40,000 worth of conditioning polymer. If a control system could reduce this cost by 10 percent, it would be a sound investment.

A vacuum filtration installation is illustrated in Figure 4. Best operation is achieved when each filter has its own sludge

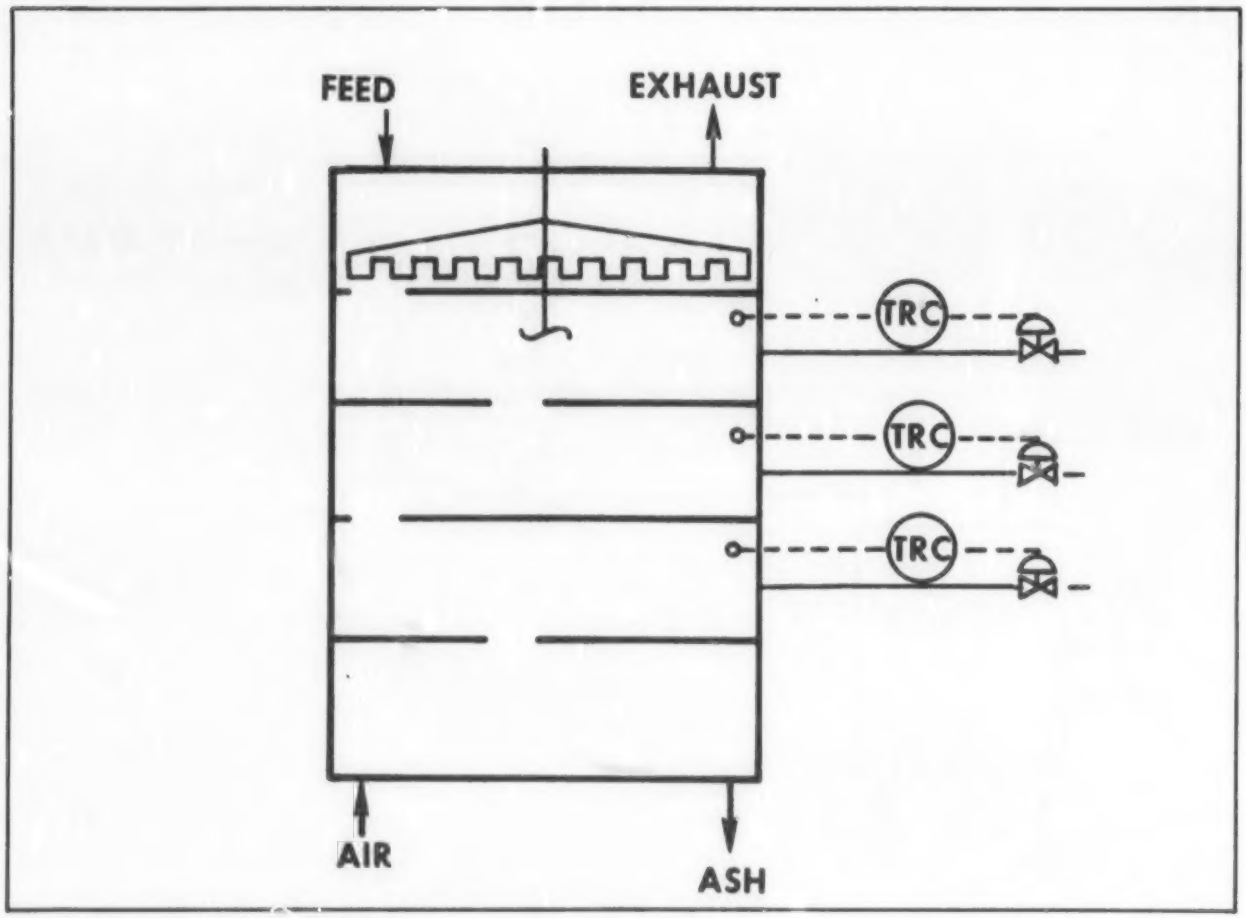

Figure 2. Temperature Control on MHF Hearths.

conditioning system. In most plants, control is manual. Sludge flow rate is controlled by varying the speed of a constant displacement pump. Conditioning agent is fed in proportion to the sludge feed rate by changing the adjustments on a chemical proportioning pump. The proportion between polymer and sludge is established by bench-top filtration tests.

If the filter capacity is adequate to handle the plant capacity in the allotted operating period, a suitable control objective would be to minimize polymer consumption. A simple automatic control procedure that is used in some plants, particularly those in the chemical industry, is to control sludge feed by the level in the sludge feed pan and match the polymer dose to sludge flow by means of a ratio controller. This procedure does not account for changes that occur in the solids content of the liquid sludge and in the filterability of the sludge. An alternative procedure, which is under test by a filter manufacturer, is to add to this control system a continuous measurement of solids content of the sludge by means of a nuclear density gauge. The polymer dose is matched by the ratio controller to the product of volumetric flow rate and sludge solids content; *i.e.*, the mass flow rate of dry solids. The control procedure now accounts for changes in sludge solids content but still does not account for changes in the filterability of the sludge.

Swanwick (1) describes the use of a rapid filterability test to control dose of chemical conditioning agent to a sludge that

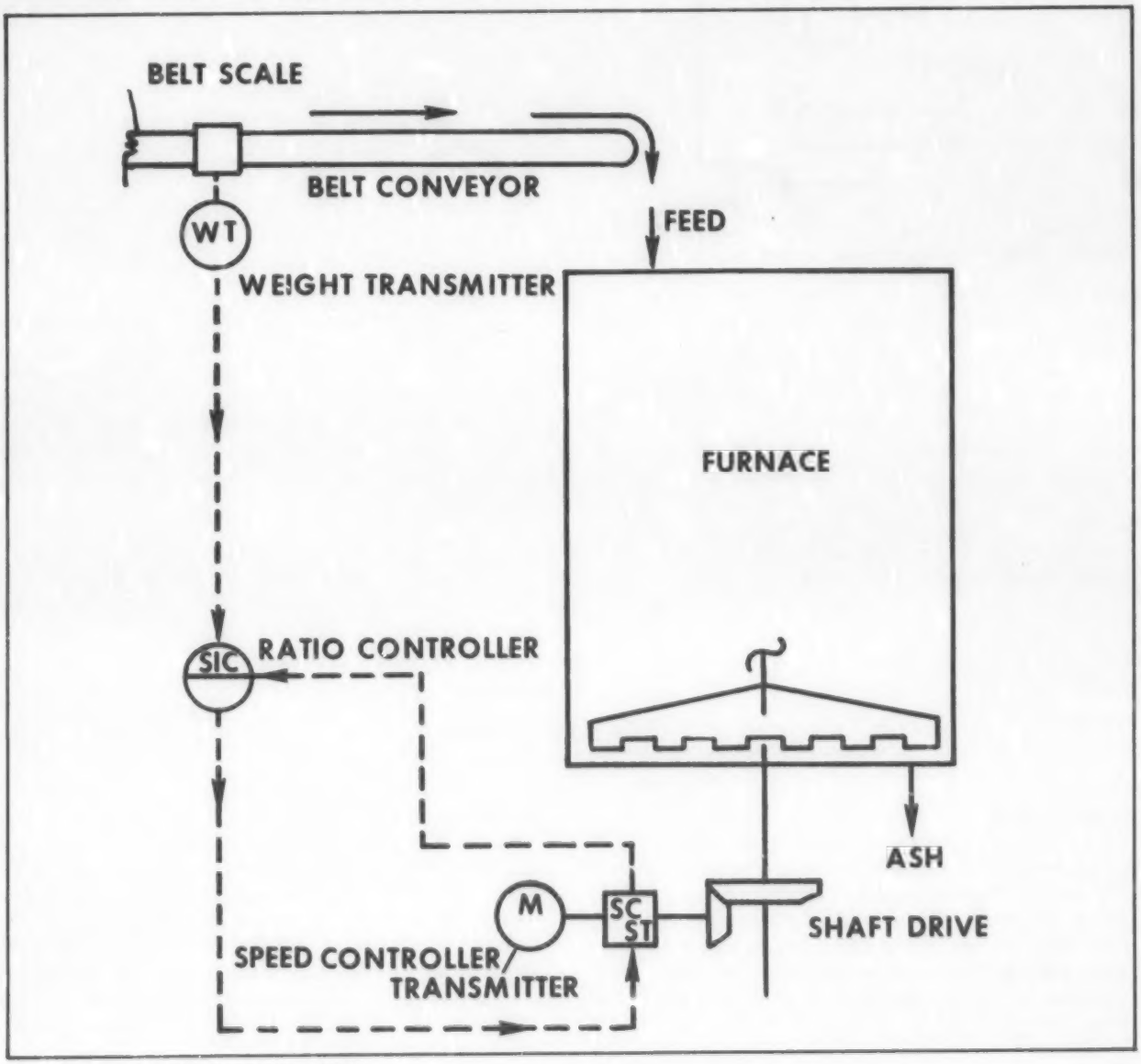

Figure 3. Control of MHF Rabble Arm Speed.

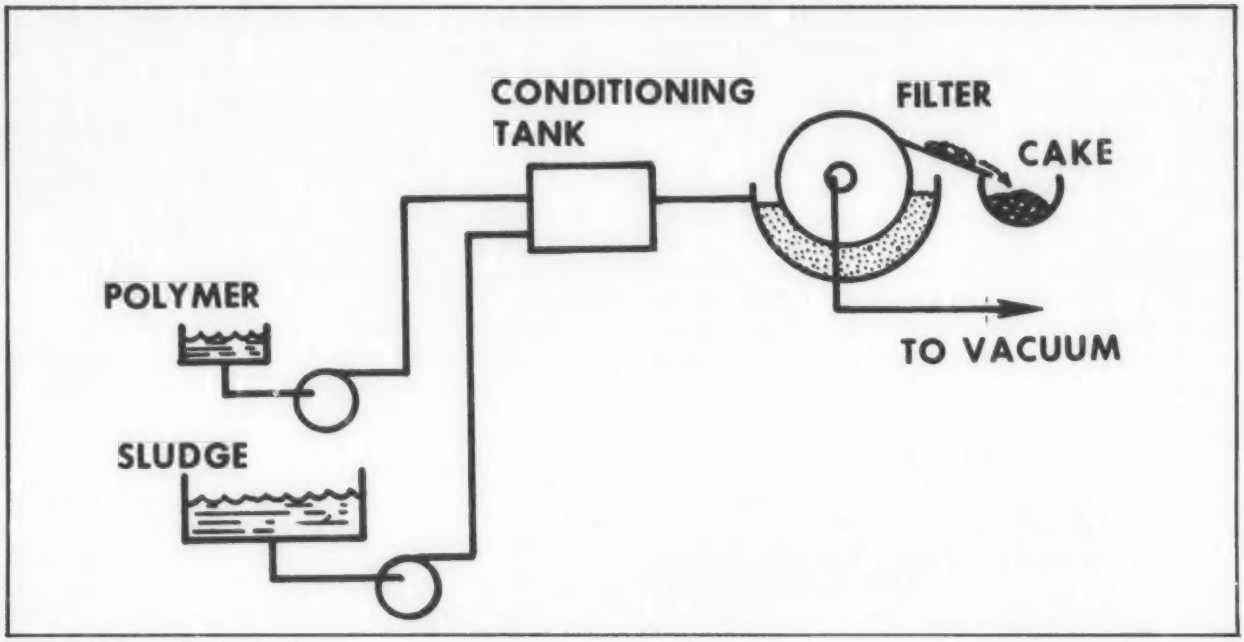

Figure 4. Vacuum Filtration of Sludge.

was to be pressure filtered. The test, which combined hand-operated mixing operations with an automated version of the capillary suction test (CST), took 4 minutes to complete and produced a recorded output. The sludge was dosed with sufficient lime to give a CST value below an empirically determined critical value. This method eliminates the need for a measurement of the solids content of the sludge. If sludges are blended before filtration so that changes in solids content and filterability are slow, the time required for the number of CST tests needed to establish optimum conditions should not seriously limit the ability to use these measurements to automatically control conditioning chemical dosage.

FUTURE DEVELOPMENTS

It seems certain that the pace at which instrumentation and control systems are introduced into sludge handling processes will accelerate, particularly in plants that handle large wastewater flows (for example, in excess of 30 million gallons per day). The primary problems to be overcome are inadequate understanding of complex processes, such as digestion, and the lack of suitable instrumentation for measuring complex phenomena.

REFERENCES

1. Swanwick, J. D., *Water Poll. Control*, 72, 78-86 (1973).

DISCUSSION

Richard I. Dick:

Is there any potential for improving and automating the performance of land systems for sludge disposal by use of **in situ** sensors for constituents such as soil moisture, ORP, oxygen concentration, ammonium, and nitrates? It would seem that sludge application schedules could be optimized, ground water contamination could be minimized, and possibilities for reduction of the nitrogen load by controlled nitrification-denitrification could be realized if such a system were implemented.

Ted Lejeune:

At the R. M. Clayton plant in Atlanta it is planned to provide polymer dosing control based on centrate density. So far we have no operating experience with this method. As an alternate, a ratio proportioning meter is available.

We have experienced continual problems in trying to use sludge density and flow meters, due to blockages and materials such as sticks in the sludge. Because of these problems, the Atlanta computer will be used mainly for logging, rather than control purposes.

The multiple-hearth furnace at Atlanta is operated on an intermittent basis, and we feel that control of the final burn-out is best done manually. This also points out the need for better training of operators for automated plants.

Carmen F. Guarino:

In contrast to the experience in Atlanta, I want to point out that there has also been good experience in operating sludge density gauges and flow meters in Philadelphia and Los Angeles.

Richard I. Dick:

Traditionally, problems of sludge treatment and disposal have been addressed independent of the problems related to the wastewater treatment process which generates the sludges. This is regrettable, for overall optimization would require simultaneous consideration of all aspects of the entire treatment process.

It would be unfortunate to extend this traditional approach to automation. Shouldn't attempts to automate sludge handling extend beyond the sludge treatment and disposal area and go back to the wastewater treatment process itself? For example, are there opportunities for controlling the quantities and physical, chemical, and biological characteristics of sludges by feedback control of the processes which generate the sludges?

John F. Andrews:

I agree that one should guard against looking at individual processes in isolation. Work is in progress on the development of an overall plant model, which will enable us to explore interactions between units, and start to think about optimization of the total operation.

P. M. Berthouex:

There are two ideas I invite Steve Graef to comment on. First, we have talked mostly about automation to monitor or control traditional processes. Can't we use control problems to direct our thinking toward design changes and the development of new processes. One use for theoretical models is to explore process and operational changes. Promising ideas are identified for pilot plant or full-scale trials. This is true even if the model is never implemented for control, or, perhaps, even if the model is later found to have inadequacies.

Secondly, the operator himself may be a good sensor. Some operators can adjust to color and sludge appearance. This is not optimal control, but it is control. As an example I cite the use of closed-circuit television at the Blackbirds Sewage Treatment Works, England. Sludge flows over a circular wire and the operator can estimate sludge density by appearance. It is simple and apparently helpful. It is also automation in a sense. Clever design ideas such as this may be an alternate—perhaps an intermediate solution—to more sophisticated automation systems.

John F. Andrews:

A sensor which could be of significant value in anaerobic digestion is an on-line calorimeter for continuous monitoring of the caloric value of digester gas. The discusser has observed the use of such an instrument at the San Jose, California, wastewater treatment plant in which the caloric value of the digester gas was measured and this signal used to control the amount of natural gas blended with the digester gas. The result was a gas with a constant caloric value for improving operation of the gas engines used in this plant.

The discusser would like to suggest that the rate of energy production, as calculated from the calorimeter and digester gas flow rate measurements, would be a valuable indicator of the condition of the anaerobic digestion process. This is analogous to the rate of methane production which has been proposed as an indicator of digester condition by Graef and Andrews (1). Moreover, this measurement, when used in combination with COD measurements on the feed to the digester, could be used to compute the efficiency of the digester with respect to energy removal from the feed sludge, since one pound of COD is approximately equivalent to 6,300 BTU of energy (2).

REFERENCES:

1. Graef, S. P. and Andrews, J. F., "Stability and Control of Anaerobic Digestion," *Jour. Water Poll. Control Fed.*, *46*, 666, (1974).
2. Andrews, J. F. and Kambhu, K., "Thermophilic Aerobic Digestion of Organic Solid Wastes," Final Report to Office of Solid Wastes, U. S. Public Health Service, Environmental Systems Engineering Department, Clemson University, Clemson, SC (1971).

CLOSURE

Stephen P. Graef:

There is a potential for improving land application systems via soil moisture, ORP, oxygen concentration, ammonia, nitrate, etc., surveillance. Moreover, the benefits recognized by Dr. Dick can and have been realized. Automation, however, would not enhance a land application operation. Most land application variables change quite slowly; *i.e.*, on the order of weeks and months rather than hours and days. Although complete and accurate surveillance is essential for gauging the condition and performance of a land application program, the monitoring does not have to be continuous or on-line. Periodic sampling and analysis both *in situ* and at the laboratory can provide the information needed to effectively manage a land application program.

Automation and continuous on-line surveillance can be a distinct advantage in controlled small-scale pilot studies. In a research environment as opposed to a large-scale production effort, agricultural instrumentation and control apparatus can be serviced efficiently and can provide the large volume of data needed for investigative studies.

In his second question, Dr. Dick states an important concept. Efforts to automate sludge handling as well as other wastewater treatment processes should not be confined to the process itself. The control strategy should take into considera-

tion the interactions between the process under consideration and others throughout the plant.

Such a system control strategy is developed on two levels. First a strategy must be formulated for each component of the system. The component control scheme must enable the process to meet its objectives, given the range of inputs which can be expected from the system. A more encompassing system strategy should then be developed which balances the interactions and tradeoffs among processes to meet the objectives of the system.

As an illustration consider a system, two components of which are the activated sludge and anaerobic digestion processes. Assume that under severe conditions the digester may be required to process 0.45 lbs. of volatile solids/ft.^{3} day for a short period. A strategy of pH, temperature, and gas recirculation regulation must be formulated if the activated sludge process does indeed provide such large masses of volatile sludge to be processed from time to time. Under normal conditions a system strategy could control the sludge produced by the activated sludge process within 0.25 to 0.3 lb VSS/ft.^{3} day. By regulating SRT and sludge blanket depth in the final clarifier, the organism loading to the digester will also be regulated. A system strategy should be formulated which will control and balance the interactions so that the total output of the system, e.g. digested sludge and clarified secondary effluent, meet or exceed the quality criteria.

In response to Dr. Berthouex's first question, math models and computer simulations are powerful tools for evaluating design changes and development of improved process trains, if not improved processes as well. It is probably the only way a designer can answer dozens of questions such as, "What would happen if . . .", without an enormous hand calculation effort. Moreover, some questions of this sort could not be answered at all without computer simulations. As indicated, several participants in this workshop have successfully utilized theoretical models to formulate productive process and operational changes.

In response to the second question, there is no reason for intentionally making automation and control techniques complicated. Process output criteria or objectives should be specified for the designer. He should in turn provide the control scheme to meet the requirements. The scheme should be reliable, easy to use by operations personnel and easy to maintain.

J. B. Farrell:

In response to Mr. Lejeune's comment, the use of centrate density (i.e., solids content) is an interesting way to control polymer dose for centrifugation. Unfortunately, gamma ray density gauges are not very sensitive indicators of sludge solids content in the range of 0 to 1% solids. Mr. Lejeune might want to consider using a turbidity meter to indicate solids content. If the centrate is too opaque, the centrate stream could be diluted in a fixed proportion with clear water to get an on-stream reading.

Mr. Lejeune observes that the multiple-hearth furnace at Atlanta will be operated on an intermittent basis, and that burnout (in preparation to shutdown) is best done manually. He is probably right that during burnout, when sludge feed is being shut off, control should be turned over to manual operation. I suggest that Mr. Lejeune should do all that he can to reduce the number of shutdown-startup cycles for the incinerator. Operation of a multiple-hearth incinerator for one shift a day with shutdown for two shifts consumes excessive quantities of supplementary fuel and disproportionately increases maintenance cost. We should really be thinking of continuous operation of multiple-hearth incinerators with shutdown at most once a week rather than once a day. Perhaps we should design to run the dewatering room during the first part of the week, provide intermediate sludge cake storage, and run the incinerator continuously with the staff of the dewatering room during the second half of the week. Alternatively, the dewatering and incinerating equipment could be operated continuously only during the first few days of the week, but this procedure presents awesome personnel scheduling difficulties.

In response to Professor Dick's question, I believe that the design of the water purification processes of a sewage treatment plant and the sludge treatment and disposal processes should be considered simultaneously, with the intention of minimizing cost and optimizing performance. Processes selected and conditions at which the processes are operated have a strong effect on sludge quantity and properties. As an illustration, it is well known that the quantity of biological sludge produced in the activated sludge process depends on the operating conditions of the process. However, these conditions are fixed within relatively narrow limits by the initial design. It is difficult to picture a control scheme, for example, which would feed back into the water purification processes when the sludge concentration at the sludge thickener outlet starts to decrease or when the sludge production rate exceeds a desired figure. The water purification processes should primarily be controlled to produce high quality water. Control schemes for sludge handling and disposal should probably not feedback into the water purification processes.

Report of Working Party on RESEARCH NEEDS FOR AUTOMATION OF SLUDGE PROCESSING, TRANSPORT AND DISPOSAL

Richard I. Dick
Professor, Department of Civil Engineering, University of Delaware, Newark, DE 19711
John R. Trax
Office of Water Programs, Environmental Protection Agency, Washington, DC 20460

In spite of the fact that sludge treatment and disposal has been a problem since the first wastewater treatment plant was built, there is probably a greater backlog of unsolved problems related to automation in the area of sludge treatment and disposal than in other areas. Development of technology in sludge treatment and disposal has largely been ignored in the past and even comparatively new processes (such as the chemical-physical processes developed in recent years) are probably closer to being capable of precise automation than are processes for sludge treatment and disposal.

Because of the larger number of unsolved problems relating to sludge treatment and disposal, and because of the accompanying difficulties in accomplishing effective automation of sludge treatment and disposal processes, the area deserves high priority in competition for research funds. There is appreciable potential for significant returns on research money spent in this area.

STATEMENT OF PROBLEM

Attempts to effectively and extensively automate sludge treatment and disposal schemes might be frustrated by a number of problems. Some of these are indicated below.

1. Automation of sludge treatment and disposal facilities inevitably involves sensing of sludge properties and control of sludge flows. To accomplish this, it is necessary that sludges be free of gross solids, rags, sticks, stones, etc. This problem is not expanded in the later list of research needs because it is not felt that research is warranted on the subject. However, in the considerations which follow, it is assumed that complications caused by such materials in sludges have been eliminated. Questions remain as to whether the solids can best be eliminated from the raw waste flow or from the sludge itself.
2. To automate sludge treatment and disposal schemes it will be necessary to sense appropriate properties of the sludge. In the case of sludges, some of the important properties are less well defined than with wastewater. For example, automated procedures for sensing physical parameters such as settleability and dewaterability may be difficult to develop.
3. Attempts to effectively automate sludge treatment and disposal processes may be expected to be hampered by a heritage of ineffective integration of the various steps involved in sludge treatment and disposal with each other and with the wastewater treatment processes which generate the sludges. The relationships between various processes of sludge treatment and disposal are less well understood than the relationships between various stages in wastewater treatment.
4. Temporal variations in sludge characteristics may hamper the performance of many sludge treatment and disposal schemes. An example is the anaerobic digestion process which, particularly in cities of small and moderate size, often does not operate under stable conditions.
5. Although the performance of all processes of sludge treatment and disposal is related to the suspended solids content of the sludge, it is difficult to automatically measure those concentrations.
6. Because processes for sludge treatment and disposal in general have not been developed to as high a degree as those for wastewater treatment, appreciable work is needed to develop predictive models describing the performance of these processes.

RESEARCH NEEDS

The following specific research needs are noted.

1. Investigation of the interaction between various processes used in sludge treatment and disposal must be undertaken so that the overall process of sludge management can be optimally integrated. In the area of automation of sludge treatment and disposal, this is considered to be a major research need. Additionally, benefits are to be derived from better integration of sludge treatment and disposal facilities with the processes which generate the sludges.
2. Methods for sensing suspended solids concentration over a wide range of sludge consistency are needed. Three ranges of suspended solids concentrations might arbitrarily be identified:
   a. Dilute concentrations (filtrates, centrates, etc.): turbidimeters offer possibilities for sensing in this region.
   b. Intermediate range (concentrations typical of gravity thickener feed and underflow): some need for improvement of available instrumentation in this area is seen.
   c. High concentrations (filter cakes, centrifuge cakes, etc.).

In spite of the importance of these measurements, means for sensing them in real time are not available.

3. There is a need for sensors to continuously monitor the physical properties of sludge which are important to various sludge treatment and transportation methods. Specifically:
   a. On-line monitoring of the rheology of sludges.
   b. On-line measurement of the settleability of sludges.
   c. Continuous measurement of the dewaterability of sludges.
   d. Continuous measurement of the calorific value of sludges.
4. Existing steady-state models and developing non-steady state models of the performance of gravity thickeners would seem ready for implementation. The final step of field testing of these models to demonstrate the control strategy could seem to be important for future progress in sludge thickening and automation of sludge thickening processes.
5. The following research needs exist in the area of biological stabilization of sludges.
   a. Improve the stability of the anaerobic digestion process for stabilization of sludges. Representatives of larger cities did not feel that this need deserved high priority because their sludges tend to be more uniform in quantity and quality. The need was considered to exist for moderate and small-sized cities, however.
   b. Field scale evaluation of available models of anaerobic digestion performance should be undertaken. Sensors such as those for gas composition, gas production rate, volatile acid concentration, alkalinity and suspended solids concentration would be useful in undertaking such field scale evaluation and refinement of models of anaerobic digester performance to develop a demonstrated control strategy.
   c. Similarly, existing models of the performance of aerobic digesters also should be evaluated in field scale studies.
   d. The effects of aerobic and anaerobic digestion on solids separation and dewaterability need to be evaluated and developed into performance models.
6. Sludge conditioning processes are not fully understood and are very difficult at present to automate. Two phases of research are required in this area:
   a. Stage one would involve empirical, short-term evaluations of sludge conditioning processes. Control procedures would then be developed on an empirical basis to regulate machine variables such as submergence or drum speed and control coagulant doses.
   b. Long-term research should be conducted to improve fundamental understanding of conditioning and dewatering processes. This research should lead to development of models based on fundamental mechanisms involved in conditioning and dewatering.
7. In the area of incineration, the prospect for avoiding short-term transients by storage and blending of dewatered sludge prior to introduction into incinerators to assure a constant supply of sludge of uniform quality should be undertaken. Existing incinerator monitoring techniques for automation procedures are considered to be relatively well developed except that additional work is needed on suspended solids monitoring devices, and devices for sensing the calorific value of sludges need to be utilized.
8. Currently, little research for automation of ultimate disposal schemes such as land and ocean disposal is considered to be of high priority. Much additional work, however, is needed in developing the ultimate disposal processes themselves. In the area of automation, there is need for a means of sensing the numbers of pathogenic organisms and viruses in sludge.

Priority of Research Needs

As argued in the Introduction, all research needs in the area of sludge treatment and disposal have a comparatively high priority because technology in this area has lagged behind that of other wastewater treatment processes. Following is a ranking of priorities within this high priority area:

1. The interrelations between the various processes used for sludge treatment and disposal need to be explored to allow integration of the processes with aid of automation procedures in an optimal way.
2. Develop reliable suspended solids concentration sensors for the entire range of solids encountered in sludge treatment and disposal. Sensors for the low range of suspended solids concentrations (for flows such as filtrates and centrates), for the intermediate range of concentrations (typical of liquid sludges), and for the high range of concentration (corresponding to dewatered sludges) will operate on different principles.
3. Develop a "settleability meter." Such a device might be based on actual measurement of settling properties or by sensing a related physical property.
4. Develop a "dewaterability meter." Such a device is essential for automation of sludge dewatering processes and monitoring of sludge conditioning processes.
5. Carry out field-scale testing of gravity thickening models. Such models currently are available but require extensive full-scale testing and possible modification.
6. Develop control strategies for improving the stability of anaerobic digesters. This is not a high priority item for large installations, but it is important for smaller installations receiving occasional toxic discharges.
7. Develop an empirical model for control of conditioning and dewatering facilities. This basis for automatic control of conditioning and dewatering processes is needed until more fundamental models can be developed.
8. Develop and apply sensors for sludge rheology. Such sensors should be useful for controlling pumping and piping operations and, potentially, other operations whose performance is related to the physical properties of sludges.

9. Carry out field-scale evaluation of anaerobic digestion models. Such models currently are available, but lack the extensive field-scale verification and modification required to achieve a demonstrated control strategy. Effects of anaerobic digesters on solids separation and dewaterability should be included.
10. Develop rational models for control of conditioning and dewatering facilities. This is a more long-term solution to the same problem addressed in high priority item number 7 above.
11. Develop a sensor for pathogenic organisms and viruses in sludge.
12. Conduct field-scale demonstrations of controlled "steady-state" incineration accomplished by storage and blending of dewatered sludge prior to incineration.
13. Evaluate the transferability of industrial solids-handling technology to municipal and industrial sludge treatment and disposal.
14. Conduct field-scale evaluations of models for aerobic digester performance. Effects of aerobic digestion on solids separation and dewaterability should be included.
15. Develop and test on-line sensors for the calorific value of sludges.

COMPUTER APPLICATIONS IN AUTOMATION

Workshop on Research Needs
Automation of Wastewater Treatment Systems

Preceding page blank

CURRENT PRACTICE IN INSTRUMENTATION AND COMPUTER APPLICATION AT THE COUNTY SANITATION DISTRICTS OF LOS ANGELES COUNTY

Walter E. Garrison, Kip Payne and Tim Haug
County Sanitation Districts of Los Angeles County, 1955 Workman Mill Road, Whittier, CA 90601.

INTRODUCTION

The Sanitation Districts of Los Angeles County plan, design, construct, and operate a sewerage system serving almost 4,000,000 people residing in all or part of 71 incorporated cities and adjacent County territory. The basic operations are supported by a substantial research and development effort directed toward improving existing design and operational techniques and to pilot testing of advanced treatment processes for future water quality upgrading. District management is dedicated to a well-financed program to improve plant reliability and performance through development and application of any advanced technology which will aid in achieving this goal.

The purpose of this paper is to present a manager's overview of the present "State-of-the-Art" technology of the application of instrumentation and computers in the Districts' wastewater treatment plants and collection system. The text has been prepared to briefly summarize salient features of the existing system, to explain the purpose and function of automation in routine operation at the plants, to describe the current practice in computer application and, finally, to explore potential uses for future application of instrumentation and computers.

DESCRIPTION OF EXISTING SYSTEM

All service areas of the Districts are served by separate sewerage systems with minimum storm water infiltration. Rainfall generally occurs for about three months during the year. Thus inland plants discharge to dry water courses most of the year or to reclamation projects whenever available. Public contact directly with plant discharges is common, requiring the maintenance of high-quality effluent, adequately disinfected at all times.

In the principal Los Angeles drainage basin, approximately 420 million gallons per day of sewage is processed by six wastewater treatment plants. Five of the plants utilize the activated sludge process and are strategically located inland to withdraw raw sewage from existing trunk sewers which are tributary to a large primary plant near the ocean. The inland plants are unique in that all solids removed in the treatment process are returned to the existing trunk sewers for centralized processing at the primary treatment plant. Table 1 summarizes the flow parameters of the treatment plants on this system.

Six other District treatment plants ranging in size from 0.2 MGD to 5 MGD serve other inland drainage basins. Solids processing at these plants is handled conventionally by use of two-stage anaerobic digestion followed by onsite digested sludge drying beds or truck transport to offsite drying and/or disposal.

At the large primary plant (JWPCP) 500 tons per day of raw sludge is stabilized in a highly automated single-stage, high loading anaerobic digestion process followed by a two-stage digested sludge dewatering station. The dewatering station consists of a first stage, continuous-flow solid-bowl centrifuge followed by a second stage, batch-type basket centrifuge, the latter currently under construction. Centrate from the dewatering station, at about 1000 mg/l, will be recycled to the raw sewage channel, with the cake discharged to an open-bed composting operation. Most of the dried solids will be sold as a fertilizer, with the balance hauled to landfill.

Expansionof the above described system, based upon current federal legislation, will consist of construction of secondary treatment at the existing primary plant. Pilot-plant testing is currently in progress for this 300 million dollar expansion. An interim short-term improvement in effluent quality will be achieved by chemical treatment using polymers, to achieve 80% removal of suspended solids, followed by fine screening with a 20 mesh travelling water screen to remove remaining floatables prior to ocean discharge.

At the inland plants, planning for upgrading is concentrated on advanced treatment techniques to reduce coliform bacteria

TABLE I
LACSD TREATMENT PLANTS IN LOS ANGELES BASIN

TREATMENT PLANT	DESIGN FLOW MGD	AVERAGE DAILY FLOW MGD (AS OF JULY 1973)	RATIO OF PEAK TO MINIMUM FLOW
Primary Plant			
Joint Disposal Plant (JWPCP)	450	350	2.6
Activated Sludge Plants			
Whittier Narrows WRP	12.5	12	1.5
San Jose Creek WRP	38	31	3.1
Pomona WRP	14	8.5	4.3
*Los Coyotes WRP	38	8.5	1.9
Long Beach WRP	13	9.1	4.3

*Includes 25 MGD currently under construction.

to less than a median value of 2.2 per 100 ml and to the removal of virus below levels of detection. Such sophisticated treatment processes will not only assure greater public health protection where human contact with undiluted effluent occurs, but also will upgrade water quality to a level where reuse projects will gain much wider public support. Currently, the Districts' staff is designing a carbon-adsorption advanced treatment module for the Pomona WRP which will provide 10 MGD of water meeting the above criteria. Award of contract for construction is scheduled for December 1974.

AUTOMATION IN ROUTINE OPERATION

The following discussion is intended to provide a general summary of those instrumentation systems which are in routine use to provide operational control of District plants. A considerably more detailed report is currently being prepared under an EPA research grant titled, "State-of-the-Art Technology for Semi-Automatic Control of Activated Sludge Treatment Plants". This detailed report is scheduled for completion by March 1, 1975.

The management policy of the Districts encourages maximum utilization of advanced control systems where it can be demonstrated that improved reliability and performance will result. A continuing effort is being made to field-test new and, hopefully, improved control equipment to clearly establish capital, operation and maintenance costs. Backup equipment and/or manual override of all automatic controls is obviously necessary to assure continuous compliance with requirements of regulatory agencies. Equipment described in this paper is satisfactorily controlling plant operations, but improvements are being sought which will reduce operational manpower requirements and improve effluent quality at a reasonable capital cost and without excessive maintenance costs.

Inlet Pumping Controls

All of the influent pumping plants in the LACSD system are designed with variable speed pump and liquid level control. In general, water surface elevations in the incoming sewers are maintained near normal depth by varying pump speed with depth of flow. Although this proportional relationship between depth and pump speed does not exactly produce normal depth for all flows, it approximates it closely enough to avoid adverse effects caused by excessively high or low velocities in the sewer. Utilization of the potential storage capacity in incoming trunk sewers to reduce peak flow has not been augmented since the warm climate and correspondingly high temperature of the sewage would cause odor problems and higher hydrogen sulfide levels than already exist. Variable-speed pumping to match normal water evaluations eliminates "breathing" of wet wells with attendant discharge of odorous air to the neighborhood.

In a typical recent design, smaller pump units consist of a vertical 10-inch centrifugal pump, flexible shafting to a close coupled magnetic drive, and electric motor. Larger pump units

are similar except for the addition of a right-angle gearbox speed-reduction unit. Major components of the control system consist of a liquid level sensor and transmitter, liquid level control unit, and the motor/variable speed drive units used to power the pumps.

The level control system controls the influent pumps so that the rate of discharge from the pumping station is approximately equal to the varying rate of sewage inflow. Level control in the wet well is initiated by means of proper pump sequencing and by varying the pump speed. The system is capable of sequencing pump operation and varying the speed of all pumps as necessary to pump a variable station flow without storage in the wet well.

Primary intelligence for the level control system is obtained from an electronic differential pressure transmitter or transducer. This unit is used to sense rising and falling liquid level in a stilling well which is directly connected to the influent wet well. Pressure sensed in the stilling well is converted to a 4-20 milliampere direct-current control signal, proportional to the stilling well water level.

The liquid level control unit receives the control signal generated by the differential pressure transmitter. This signal is used as a pilot signal for operation of the control equipment. These operations include indication of the liquid level in the wet well, initiation of start and stop functions for all pumps, modulation of pump speed, and actuation of alarms for high and low water levels in the wet well.

In a special situation where available flow in a trunk sewer greatly exceeded treatment plant capacity and the plant was being operated for reclamation purposes, pump controls were set to vary pump speed to maintain a constant water surface elevation in a channel feeding the treatment plant. Thus, a constant flow could be maintained through the plant. Generally, however, existing inlet pump controls function well and no special need exists for more sophisticated control. Later in this paper the potential for flow equalization in existing CSD plants will be discussed and, in that instance, more complicated controls would be warranted.

Process Air Controls for Activated Sludge Plants

Basically the quantity of oxygen (air) required to satisfactorily operate an activated sludge plant will vary depending upon the organic load in the primary effluent, the cell residence time at which the plant is operated, and whether nitrification does or does not occur. Oxygen requirements to stabilize a wastewater can be determined within reasonably narrow limits depending primarily upon influent COD, NH_3-N concentrations and mean cell residence time. However, air quantities required to satisfy oxygen demand are more variable depending upon the type of oxygen transfer equipment used and the efficiencies at which they operate. In all but completely mixed systems, rates of oxygen consumption will vary along the length of the aeration tank. Therefore, process air control is critical to the stable operation of the activated sludge system. Not only must total air quantities be controlled, but the rate at which it is supplied along the aeration tank must be varied to provide for stable and efficient treatment.

Process air control systems used at CSD activated sludge plants utilize either a control signal to throttle a centrifugal compressor or preset timers to control the number of on-line positive displacement compressors. In the former case, dissolved oxygen probes, cam programmers, and plant flow rate are currently used to provide the command signal. The control method used at various CSD activated sludge plants is shown in Table 2.

None of the above control systems have operated without some disadvantages, discussion of which is too lengthy to be included in this short paper. From a theoretical standpoint control by use of D.O. should be the most desirable since such a system can respond to any diurnal fluctuation in oxygen demand as well as shock loads, whether they are caused by flow rate or waste strength. Until recently, a reliable D.O. probe has not been available which was capable of holding calibration to the extent that air compressor programming could be dependably set by the sensor. Recent developments in this field now make D.O. sensing a viable control scheme.

Experience with D.O. probe control systems has revealed several operational characteristics which must be considered in any application. D.O. levels below 1 or 2 mg/l will affect nitrification kinetics by imposing a rate limitation. Based upon experience in Southern California, if the mean cell residence time is above 5 to 6 days (dependent upon temperature) and the D.O. set point is below about 0.5 mg/l, nitrification may not occur because of the D.O. rate limitation. Conversely, if the D.O. set point is increased much above 0.5 mg/l the rate limitation is removed and nitrification will proceed. This will produce a sharp increase in oxygen demand and process air flow will increase dramatically to try and match the demand. If nitrification is not desired, the best operational procedure is to keep the MCRT below about 4 days. However, this may not produce the best quality effluent in terms of suspended solids.

In the D.O. probe system currently used at the CSD plants, only one D.O. probe can be selected at any time to control process air flow. The D.O. probe system does not regulate the distribution of air flow along the aeration system, but only regulates total air flow to the aeration tank in order to maintain a dissolved oxygen concentration at the site of the controlling probe.

Another operational consideration with regard to the D.O. probe control system is the added maintenance required, compared with other control techniques in use at the CSD plants. Probes in current use require weekly routine maintenance, adjustments and calibration by instrument repair personnel and daily comparative checking by the plant operator. If reliable response is obtained, this level of maintenance is not considered to be excessive.

If the full potential of the D.O. probe system is to be realized, total air flow and distribution of air throughout the aera-

TABLE 2

ACTIVATED SLUDGE PROCESS AIR CONTROL

Treatment Plant	Average Flow MGD	Air to Flow Rate	D.O. Probe	Cam Programmer	Timers
Whittier Narrows WRP	12			X	
San Jose Creek WRP	31		X		
Pomona WRP	8.5	X			
Los Coyotes WRP	8.5	X			
Long Beach WRP	9.1		X		
Dist. 26 WRP	3.3				X
Dist. 32 WRP	1.3				X

tion system must be controlled while still preventing closure of the inlet guide vanes beyond the point that would cause compressor surge. This may well represent a potential application for a mini-computer.

Waste Activated Sludge Control

Control of mean cell residence time requires wasting of a predetermined mass of activated sludge each day. Two alternate control schemes have been proposed to accomplish solids wasting, either wasting directly from the mixed liquor or wasting from the return sludge line coming from the secondary sedimentation tanks. The latter method has been in dependable use at CSD plants. Propeller meters are used for waste activated sludge measurement. The propeller meter has proven to be cheaper than other types of flow measurement devices and is relatively maintenance-free, provided that effective primary sedimentation tanks precede the secondary system and that no solids recycle from aerobic or anaerobic digestion is discharged into the secondary system. Dependable 24-hour composite sampling is also mandatory, but such sampling should be provided regardless of the wasting system.

In the CSD design, a pulse signal generated by the propeller meter is sent to a pulse-to-current converter. Converter output is a 4 to 20 ma signal, proportional to flow rate. This signal is compared with a set point and used to control the position of a motorized throttling valve. The signal also actuates a recorder, flow totalizer and a no-flow alarm. Thus, if something should accidentally stop the propeller, an alarm is immediately sounded, alerting the operator.

The technique of wasting a constant flow rate from the return sludge line as set by the operator each day has been used in LACSD installations for many years. The control system functions with a minimum of maintenance. However, the main test of any sludge wasting technique is whether it actually wastes the correct mass of cells and can maintain desired MCRT values. Years of operational experience with daily inventories of treatment plant solids indicates that the wasting technique and associated control equipment function properly.

Primary Sludge Pump Control

When primary sludge from he Districts' inland renovation plants is wasted to the existing trunk sewer, precise control is unnecessary. The only critical observation is to assure that no sludge blanket accumulates in the tank. Conversely, in the downstream primary plant (JWPCP) where solids must be processed, the maximum attainable sludge concentration is desirable to minimize the volume of sludge to be treated.

The Districts utilize radioactive density meters to monitor and control raw sludge pumping, followed by a control system which distributes incremental amounts of sludge to each digester until a preset maximum amount is fed to each operating cell. Seed sludge can be circulated to any digester if required, but routinely, a completely mixed cell does not require seed

sludge. All controls are automatic with an operator decision required at the end of each 24-hour period as to the quantity to be fed to each of the 31 active digesters currently in operation. Loading decision is based upon volatile acid concentration, pH, gas production and previous loading history with some minor consideration given to alkalinity and gas composition. Sludge concentration and quantity of flow are critical measurements. Flow measurement is made by two Venturi-type instruments in series, one of which is redundant and used as a check on meter calibration.

Further automation of this process awaits instrumentation capable of continuous measurement of the critical control parameters.

Chlorination Control

Control systems in current use at LACSD secondary plants provide for rate control of chlorine feed, paced by plant flow and fine-tuned by a chlorine residual feedback. Either free or combined residual chlorine can be used as the feedback signal. Liquid chlorine is stored on site and fed through evaporators with the resultant solution discharged through mixers to the final effluent. These systems are dependable and easily maintained.

At the primary plant (JWPCP), where chlorination is not routinely required for deep ocean discharge, liquid chlorine is mixed with slaked lime, $Ca(OH)_2$, to produce a hypochlorite solution. When chlorination is required, dosage of about 25 to 30 ppm into an average flow of 350 MGD with peaks up to 550 MGD requires massive amounts of chlorine. The hypochlorite solution is fed into the suction side of effluent pumps to provide rapid mixing in the pump and downstream manifold.

Control by chlorine residual is not particularly effective at present because of the return of centrate from the sludge processing plant. Following completion of current construction of additional solids processing equipment, the centrate will be removed from the plant effluent. This, together with polymer addition to the primaries, will result in an improved effluent quality. Control will then be more reliable.

Return Sludge Pump Controls

Control of sludge return rates from the final clarifiers is normally only critical when a treatment plant approaches design capacity. Under these conditions, excessively high return rates can reduce mixed-liquor aeration time below desirable levels and decrease detention time in the final sedimentation tanks. Also, during periods of sludge bulking, return rate must be adjustable to prevent solids accumulation in the final clarifiers with consequent overflow into the plant effluent.

The most effective design utilized by the LACSD is a blanket detector unit which controls either direct pumping rate from the sludge hopper or the modulation of a valve controlling withdrawal to a sludge sump. Relatively simple controls can then be used to vary pumping rate from the sump to maintain a relatively constant water surface elevation in the sump.

A blanket detector control system has the operating advantage of increasing return rate as mixed liquor flow increases and decreasing the return rate as mixed liquor and plant flow decrease.

Manual override of a return sludge system can also be useful if return rate is to be reduced during periods of low plant flow to allow maximum compaction of sludge for wasting purposes. This mode has not been utilized at LACSD plants, however, since return of activated sludge to the aeration system as promptly as possible has been a prime goal.

EXISTING USAGE OF COMPUTERS AT CSD PLANTS

Computer usage by the Districts can be divided into two categories. The first is the classic data processing function, which includes normal accounting activities, scientific processing and data base systems. The second category of computer usage by the Districts is the use of computers to respond in a predefined manner to "real time" signals from remote sensing devices. These computers are commonly called process control computers because, in many cases, they actually control the processing function in a manufacturing plant.

The classical data processing activities are carried out on an IBM System 370 Model 125 located at the Joint Administration Office's computer facilities. The IBM 370/125 is a general-purpose business and scientific computer. It has multiprocessing capabilities for the running of five jobs concurrently and for spooling all input and output for unit record devices to direct-access disk storage. The 370/125 has the capability, although it is not implemented, for communication and status inquiry, and control of a MODCOMP mini-computer at the Districts' primary plant.

There are five major areas of data processing activity at the computer facilities in the Joint Administration Office.

The first area of activity is batch scientific data processing. To meet the needs of the Districts' engineering departments, facilities for the batch submission and execution of scientific programs have been provided. The programs written either in the FORTRAN or PL/1 languages are submitted on punched cards at the data center in the Joint Administrative Office. Typically, applications consist of problems such as the solution of traverses, large-scale statistical analyses, and simulations for planning purposes.

A second area of activity is the processing of data from the batch accounting and personnel departments. Information submitted by the Accounting Department, Personnel Department, District landfill sites, etc., is keypunched and submitted at the data center in the Joint Administration Office. Applications typically consist of projects such as the Refuse Disposal Billing System which handles billing for a system handling in excess of 15,000 tons per day of solid waste.

In addition to the batch processing, there are three areas of tele-processing activity at the data center.

The Districts' major teleprocessing project is the Water Renovation Plant Data Base system. The seven larger second-

ary sewage treatment facilities located throughout Los Angeles County dial into the data center once daily using teletypes. Each plant enters about 100 operational parameters into the 370/125. A series of interactive programs, using the parameters supplied by the operator, then sends a detailed response to the plant indicating parameters to be used for the next day's plant operation. This series of programs also produces daily information as to whether the plant is exceeding any of the standards of the Water Quality Control Board. If the plant exceeds these standards, the plant is informed by the program so that immediate action may be taken. Additionally, the operational status (total flows, etc.) and Water Quality Control Board compliance information for all of the plants can be retrieved from terminals at the Joint Administration Office. In completing water quality compliance and operational parameters, the interactive programs use plant readings for a 30-day period which are stored by on-line direct-access disk devices. Once monthly, these stored records are used as input for batch programs which compute a Monthly Operational Status Report showing long-term trends. A typical report is shown in Appendix 1.

A second teleprocessing activity at the Districts is the Industrial Waste Project. On-line data inquiry and updating of industrial waste records for industrial waste surcharge processing is done by a transaction-oriented data communication/data base management system (CIVS/VS). The 90 million character data base consists of sewage flow data, surcharge information, county assessment figures, and internal accounting information for 60,000 industrial properties in Los Angeles County. Companies with significant waste discharges are charged based on discharge characteristics and amounts in compliance with state and federal law. CRT terminals used in this data base/data communication system are located in the Industrial Waste Department and the data center at the JAO.

The final major area of activity under development at the JAO data center is the On-Line Personnel System. On-line inquiry and updating of personnel information is done from CRT's at the JAO Personnel Department. Hard-copy audit trails of these transactions are made concurrently at the data center.

The second category of computer usage, the use of computers to respond to signals from remote sensing devices, is limited to an alarm monitoring and logging systemat the Joint Water Pollution Control Plant. The Districts have not yet found it feasible to install process control computers in secondary treatment plants. However, the Water Renovation Plant Data Management System, as previously described, should allow the Districts to have the process control functions of a secondary treatment plant well defined before installation of a computerized system.

The Districts have installed a process control computer, a MODCOMP 11/25, at the Joint Water Pollution Control Plant (JWPCP). The existing system is primarily an alarm monitoring and display system. It consists of a central alarm panel and a data logging system for both remote pumping plant alarm status and inplant (JWPCP) alarm status.

There are 34 remote pumping plants located at various sites around the Los Angeles County area. All but one plant are connected by leased telephone lines to the JWPCP alarm facility. The most remote pumping plant is periodically connected to the alarm facility by use of an automatic dialer. The conditions presently being monitored at the pumping plant are (1) high water level in wet well, (2) high water level in dry well, (3) power failure, (4) pump control failures, (5) communication failure, (6) A/C power failure to telemetry device.

The inplant alarm system can be broken down into two types of subsystems. The first is the Methane Detection Subsystem, which continuously monitors the level of methane gas at 6 points within the enclosed pipe galleries. The meters are directly wired to display devices on the central alarm panel. An alarm is activated if a certain level is exceeded.

The second subsystem is the in-plant telemetry system and is responsible for the majority of the alarm data transmission. There are 654 contact-closure type alarm points scattered throughout the JWPCP. All of these alarms are assigned to and wired into an existing local annunciator panel at some localized area, *i.e.*, Chlorination Station, Sludge Dewatering Station, etc. There are some 14 local annunciator panels throughout the JWPCP.

The Central Alarm Facility can be best described by tracing an alarm as it travels through the Facility. Suppose, for example, a contact closure occurs at the chlorination facility. The signal is transmitted to the local annunciator panel where a window is permanently devoted to displaying the condition of its alarm point. A hardwired system (in reality a combination of hardware and a read-only memory computer) polls for alarms. This polling system passes the alarm to the MODCOMP computer which in turn lights the proper display window and logs the alarm on a printer. If the MODCOMP computer is inoperative, the window will still be lighted by the hardwired system, but the individual alarm will not be logged. The alarm windows at the Central Alarm Facility respond to the local annunciator panels within the JWPCP and not to individual alarms.

The MODCOMP system also has provisions for the employment of analog monitoring and control functions, depending on future requirements.

POTENTIAL APPLICATION FOR INSTRUMENTATION AND COMPUTERS

The full potential of the mini-computer at the JWPCP has not been explored since the initial decision to purchase the unit was based upon the unit being less expensive than an equivalent electronic system using conventional relays and control wiring, for primary usage as a central alarm station. Increased familiarity with the unit should result in reduced frequency of attendance by pumping plant operators to each installation and the consolidation of surveillance duties by plant

operators. Improved procedures should be possible for control of the chlorination system, inlet and effluent pumping, sludge transfer pumps and the control of the solids processing centrifuges.

The IBM 370/125 was initially installed at the Joint Administration Office in the first week in August 1974 to replace a Univac 9300 plus a number of time-sharing terminals in the Engineering Department. As promptly as advisable, all separate functions will be transferred to the new unit. The IBM 370/125 is capable of storing and manipulating vast quantities of data which would be impossible to collate without the machine.

As newer applications are tested and proven, CSD will have the hardware and personnel needed to make the necessary changes. The industrial waste surcharge ordinance will vastly increase the work involved in computing, billing, and recording collection of the surcharges from industries using the system. Coincidental to this effort to charge industries individually for services rendered, data logging of information from a much more exacting source control program must be initiated, to provide information on potential sources of toxic discharges into the system. Both the Federal Government and the State of California have instituted limitations on the quantity of toxic waste material discharged into the sewerage system. Sludge discharges of industrial waste which upset the treatment processes must be controlled or the Districts will be subject to fines for non-compliance.

With the advent of unionization of District employees, ready access must be provided for personnel records. Union negotiations on wages and fringe benefits result in extremely complicated settlements which make it more difficult to arrive at valid comparisons of prevailing wage levels. Computer data logging for quick information retrieval is urgently needed to evaluate the status of over 230 class specifications for the multiplicity of District jobs.

A desk-top study recently completed indicates that serious evaluation should be given to provision of flow equalization at the Districts' secondary treatment plants. Certainly, every indication points towards more complicated, expensive treatment requirements with far less tolerance of deviation from normal conditions. The question then must be posed as to whether the cost of storage and pumping of peak flows is less expensive than the provision of adequate process equipment and tankage to handle normal peak flows. Tertiary treatment processes are almost as expensive as secondary treatment in many cases, and if consideration to storage of secondary effluent shows it to be cost-effective, it would be even more economical to store primary effluent to provide for constant hydraulic flow through the secondary and tertiary process.

The engineering problems involved in storing primary effluent are not difficult to resolve and very possibly computer control of storage capacity versus inflow could assure maximum utilization of facilities while providing constant hydraulic loading and, to some extent, equalization of organic load.

Primary sedimentation prior to storage could preclude any solids handling problem. Covered storage with air under the covers going to aeration blowers could resolve any odor problems. Modest mixing and aeration could prevent septicity from increasing air requirements. Computer control of gates and pumping rates could minimize operator time demands and result in very effective use of facilities.

A saving in capital cost of 10% to 12% appears to be a conservative estimate of cost benefit without regard to rather obvious operator advantages in elimination of peak flow through CSD treatment plants. The time has probably arrived for implementation of this idea. District experience at the Whittier Narrows WRP with a reasonably constant hydraulic flow through the plant has already indicated that a plant originally designed for 10 MGD can handle 12 MGD even while fully nitrifying. Without nitrification the same plant can handle 14 to 18 MGD, depending on sewage temperatures.

CONCLUSION

Increased automation and application of computer technology in District treatment plants will be implemented by District management whenever an improvement in operating efficiency can be demonstrated.

Application of computer technology to management of new and complex industrial waste regulations is necessary to implement source control of toxic industrial wastes and to administer the Districts' new industrial waste surcharge.

Exacting requirements for improved effluent quality and the high cost of capital improvements now makes consideration of flow equalization in secondary plants a viable alternate to standard designs which must provide adequate capacity for peak discharges. Storage of primary effluent to equalize hydraulic loading on secondary and tertiary processes could be controlled by a mini-computer so that effective use of storage facilities is assured.

APPENDIX 1. MONTHLY OPERATIONAL STATUS REPORT.

WHITTIER NARROWS WATER RECLAMATION PLANT
COUNTY SANITATION DISTRICTS
OF LOS ANGELES COUNTY, CALIF.
JOHN D. PARKHURST - CHIEF ENGINEER & GENERAL MANAGER
*** SUMMARY OF OPERATIONS ***
JUNE 1974

DATE	PLANT CHARCTERISTICS												
	FLOW				SUSPENDED SOLIDS					COD			
	EFFLUENT	TOTAL RETURN ACT SLUDGE	WASTE ACT SLUDGE	AIR	RAW SEWAGE	PRIMARY EFFLUENT	RETURN SLUDGE	SEC. EFFLUENT	CHLORINE CONTACT EFFLUENT	RAW SEWAGE TOTAL	PRIMARY EFFLUENT TOTAL	SECONDARY EFFLUENT TOTAL	SECONDARY EFFLUENT SOL.
	MGD	MGD	MGD	MCF/DAY	MG/L	MG/L	MG/L	MG/L	MG/L	MG/L	MG/L	MG/L	MG/L
	1	2	3	4	5	6	7	8	9	10	11	12	13
1	11.98	6.08	.171	29.9	408	98	6396	4					
2	12.02	6.03	.185	29.9	362	74	6161	4		473	214	22	20
3	12.06	6.05	.162	29.8				5					
4	11.61	6.10	.190	29.8	414	106	5323	4		716	269	27	23
5	11.81	5.96	.171	29.1	384	118	5267	7					
6	12.40	6.00	.161	29.0	274	102	5627	7		442	239	41	31
7	12.05	6.08	.144	29.1	434	104	5582	7					
8	11.83	5.94	.139	29.1	418	78	5523	4					
9	12.07	5.85	.133	29.2	302	79	5240	5		553	230	29	22
10	11.95	5.87	.111	29.2	366	106	5277	7					
11	11.79	5.97	.122	29.2	414	106	5664	4		646	254	27	25
12	11.73	5.93	.111	28.6	472	90	5883	6					
13	11.83	5.91	.132	28.4	428	86	5714	6		556	224	31	22
14	11.99	5.83	.149	28.7	414	94	5901	5					
15	12.00	5.70	.145	28.8	396	86	6020	5					
16	11.99	5.73	.144	29.1	380	88	5980	5		642	225	26	20
17	11.86	5.88	.152	29.1	412	130	6126	8					
18	12.27	5.86	.168	29.4	394	116	6434	5		568	351	26	23
19	12.15	5.71	.189	29.4	556	148	6798	7					
20	11.70	5.55	.193	28.6	458	222	7372	6		973	414	30	25
21	11.74	5.55	.167	30.2	476	84	6871	6					
22	11.84	5.40	.172	29.9	400	96	6890	4					
23	11.63	5.36	.172	29.8	394	78	6355	4		580	214	27	22
24	11.48	5.44	.151	29.8	434	98	4691	5					
25	10.41	5.78	.150	29.5	424	96	6579	4					
26	12.02	5.51	.142	29.7	450	96	6218	4					
27	12.22	5.46	.143	29.1	466	114	6383	4		549	234	28	24
28	12.03	5.41	.143	29.5	302	114	6322	6					
29	12.08	5.53	.143	29.5	568	96	6206	6					
30	11.39	5.33	.138	29.5	403	82	6236	4		699	201	23	17
MEAN	11.86	5.76	.153	29.34	414.2	102.9	6036	5.2		616	255.8	28.1	22.8

APPENDIX 1. MONTHLY OPERATIONAL STATUS REPORT (CONTINUED)

WHITTIER NARROWS WATER RECLAMATION PLANT
COUNTY SANITATION DISTRICTS
OF LOS ANGELES COUNTY, CALIF.
JOHN D. PARKHURST - CHIEF ENGINEER & GENERAL MANAGER
*** SUMMARY OF OPERATIONS ***
JUNE 1974

DATE	PLANT CHARCTERISTICS						
	NITROGEN					TDS	
	PRIMARY EFFLUENT		SECONDARY EFFLUENT			ELEC. COND.	MG/L
	ORG.	NH3	NH3	NO2	NO3	MICROMHO /CM	
	MG/L	MG/L	MG/L	MG/L	MG/L		
	14	15	16	17	18	19	20
1		20	.1	.02	18.00		683
2		20	.2	.01	18.50		586
3		19	.2	.01	21.00		
4		22	1.2	.04	19.00		650
5		21	.2	.02	17.50		645
6		21	.3	.03	20.00		598
7		22	1.1	.06	20.00		606
8		22	1.0	.02	18.50		627
9		20	.2	.02	19.00		577
10		21	.3	.02	18.00		605
11		21	.4	.04	17.00		627
12		22	.3	.04	20.00		567
13		22	.6	.04	19.00		594
14		21	.4	.05	17.00		600
15		19	.6	.04	16.50		633
16		21	.2	.04	16.50		551
17		22	1.3	.09	15.50		637
18		22	.4	.04	10.50		566
19		22	1.0	.07	9.50		617
20		25	2.4	.06	8.50		588
21		18	.6	.04	13.00		651
22		20	.2	.02	12.00		638
23		19	.1	.02	17.50		588
24		20	.1	.02	16.00		654
25		20	.1	.03	16.00		527
26		20	.3	.03	15.00		666
27		20	.6	.03	12.50		666
28		20	.4	.03	15.00		708
29		20	.1	.02	15.50		618
30		20	.2	.02	15.30		562
MEAN		20.7	.5	.03	16.24		6.4.9

APPENDIX 1. MONTHLY OPERATIONAL STATUS REPORT—(CONTINUED)

WHITTIER NARROWS WATER RECLAMATION PLANT
COUNTY SANITATION DISTRICTS
OF LOS ANGELES COUNTY, CALIF.
JOHN D. PARKHURST - CHIEF ENGINEER & GENERAL MANAGER
*** SUMMARY OF OPERATIONS ***
JUNE 1974

DATE	PLANT CHARCTERISTICS								MISCELLANEOUS				
	EFFLUENT CHARACTERISTICS								TANKS OUT OF SERVICE				
	SECCHI DISC DEPTH	EFFLUENT TEMP.	CL2 RESIDUAL EFFLUENT GRAB SAMPLE	EFFLUENT GRAB SAMPLE	CL2 24 HOUR MINIMUM	PH	SETTL. SOLIDS	DIS-CHARGE POINTS	PRIMARY TANKS	AERATION TANKS	FINALS SYS. 1	FINALS SYS. 2	FINALS SYS. 3
	FEET	FAREN.	MG/L	MPN	MG/L		ML/L						
	21	22	23	24	25	26	27	28	29	30	31	32	33
1	9.0	73.0			0.	7.70			0	0	0	0	0
2	9.0	73.0			.80	7.60			0	0	0	0	0
3	9.5	74.0	.90	49	0.				0	0	0	0	0
4	9.5				0.	7.60			0	0	0	0	0
5	9.0	74.0	.72	79	0.	7.60			0	0	0	0	0
6	8.0	74.0	.18	49	0.	7.60			0	0	0	0	0
7	6.0	74.0	.54	5	0.	7.60			0	0	0	0	0
8	6.0	74.0			1.30	7.50			0	0	0	0	0
9	7.0	75.0			.20	7.60			0	0	0	0	0
10	7.5	74.0	2.40	31	.20	7.70			0	0	0	0	0
11	7.0	74.0	1.85	23	.40	7.70			0	0	0	0	0
12	6.5	74.0	1.90	49	0.	7.60			0	0	0	0	0
13	7.5	74.0	1.56	17	0.	7.50			0	0	0	0	0
14	6.0	74.0		49	0.	7.50			0	0	0	0	0
15	6.5	75.0			0.	7.60			0	0	0	0	0
16	7.0	74.0			0.	7.60			0	0	0	0	0
17	6.5	74.0	0.	2400	0.	7.60			0	0	0	0	0
18	6.0	74.0	.45	130	0.	7.40			0	0	0	0	0
19	7.5	74.0	.24	141	0.	7.70			0	0	0	0	0
20	7.5	75.0	.42	33	0.	7.60			0	0	0	0	0
21	7.5	74.0	.45	33	0.	7.60			0	0	0	0	0
22	7.5	74.0			1.10	7.70			0	0	0	0	0
23	9.0	75.0			1.10	7.70			0	0	0	0	0
24	9.0	75.0	2.44	17	.10	7.60			0	0	0	0	0
25	9.0	75.0		17	.20	7.50			0	0	0	0	0
26	10.0	75.0	.10		0.	7.50			0	0	0	0	0
27	9.0	76.0		221	0.	7.70			0	0	0	0	0
28	8.0	77.0			0.	7.60			0	0	0	0	0
29	7.0	77.0			0.	7.50			0	0	0	0	0
30	9.0	75.0			0.	7.70			0	0	0	0	0
MEAN	7.8	74.5	.94	197	.18	7.60			0	0	0	0	0

APPENDIX 1. MONTHLY OPERATIONAL STATUS REPORT–(CONTINUED)

WHITTIER NARROWS WATER RECLAMATION PLANT
COUNTY SANITATION DISTRICTS
OF LOS ANGELES COUNTY, CALIF.
JOHN D. PARKHURST - CHIEF ENGINEER & GENERAL MANAGER
*** SUMMARY OF OPERATIONS ***
JUNE 1974

DATE	MISCELLANEOUS			
	34	35	36	37
1				0.
2				0.
3				0.
4				0.
5				0.
6				.01
7				0.
8				0.
9				0.
10				0.
11				0.
12				0.
13				0.
14				.02
15				0.
16				0.
17				0.
18				0.
19				0.
20				0.
21				0.
22				0.
23				0.
24				0.
25				0.
26				0.
27				0.
28				0.
29				0.
30				
MEAN				.001

NOTES

Date	Column	Remarks
20, 21	6, 15	Primary effluent sampler malfunction
18	8, 12, 13, 16, 17, 18, 26, 37	Secondary effluent sampler malfunction
All	37	Hexavalent chromium, secondary effluent, 24-hr composite (mg/L)

APPENDIX 1. MONTHLY OPERATIONAL STATUS REPORT–(CONTINUED)

WHITTIER NARROWS WATER RECLAMATION PLANT
COUNTY SANITATION DISTRICTS
OF LOS ANGELES COUNTY, CALIF.
JOHN D. PARKHURST - CHIEF ENGINEER & GENERAL MANAGER
*** SUMMARY OF OPERATIONS ***
JUNE 1974

DATE	AERATION SYSTEM NO. 1								
	SUSPENDED SOLIDS								
	TANK 1	TANK 2	TANK 3	TANK 4	VOLATILE SOLIDS	RETURN ACT. SLUDGE	MIXED LIQUOR D.O. MG/L		RETURN SLUDGE AERATION VOLUME
	MG/L	MG/L	MG/L	MG/L	%	MGD	MAX	MIN	MG
	38	39	40	41	42	43	44	45	46
1	2628	1943	1830		75.0	6.1			.550
2	2530	1880	1788		74.0	6.0			.550
3					74.0	6.1			.550
4	2443	1827	1671		75.0	6.1			.550
5	2296	1847	1664		75.0	6.0			.550
6	2461	1732	1501		77.0	6.0			.550
7	2360	1737	1659		74.0	6.1			.550
8	2299	1699	1548		76.0	5.9			.550
9	2021	1648	1560		74.0	5.9			.550
10	2532	1710	1572		76.0	5.9			.550
11	2163	1603	1500		77.0	6.0			.550
12	2429	1870	1762		73.0	5.9			.550
13	2401	1871	1912		75.0	5.9			.550
14	2418	1730	1622		74.0	5.8			.550
15	2313	1694	1570		74.0	5.7			.550
16	2212	1770	1690		74.0	5.7			.550
17	2397	1834	1734		77.0	5.9			.550
18	2273	2054	1860		77.0	5.9			.550
19	2606	2182	2027		76.0	5.7			.550
20	2805	1937	1664		77.0	5.6			.550
21	2832	1892	1912		78.0	5.6			.550
22	2530	1837	1858		77.0	5.5			.550
23	2075	1742	1688		75.0	5.4			.550
24	2225	1748	1667		77.0	5.4			.550
25	2251	1690	1738		77.0	5.8			.550
26	2096	1804	1713		78.0	5.5			.550
27	2362	1844	1712		77.0	5.5			.550
28	2106	1926	1846		77.0	5.4			.550
29	2503	1883	1827		77.0	5.5			.550
30	2278	1780	1732		76.0	5.3			.550
MEAN	2373	1818	1719		75.8	5.76			.550

APPENDIX 1. MONTHLY OPERATIONAL STATUS REPORT—(CONTINUED)

WHITTIER NARROWS WATER RECLAMATION PLANT
COUNTY SANITATION DISTRICTS
OF LOS ANGELES COUNTY, CALIF.
JOHN D. PARKHURST - CHIEF ENGINEER & GENERAL MANAGER
*** SUMMARY OF OPERATIONS ***
JUNE 1974

DATE	AERATION SYSTEM NO. 1										
	LOADING PATTERN				SVI GRAB SAMPLE			NITROGEN			
								NO2-N		NO3-N	
	TANK 1	TANK 2	TANK 3	TANK 4	SETTL. SOLIDS	SUS. SOLIDS	SVI	LOW ORG LOAD	HIGH ORG LOAD	LOW ORG LOAD	HIGH ORG LOAD
	%	%	%	%	ML/L	MG/L	ML/GM	MG/L	MG/L	MG/L	MG/L
	47	48	49	50	51	52	53	54	55	56	57
1	66	34			150	1904	78	.03	.08	14.00	22.00
2	66	34	0		150	1896	79	.03	.01	16.00	19.50
3	66	34			140	1636	85	.01	.01	16.50	25.50
4	66	34									
5	66	34			135	1630	83	.03	.01	13.00	19.00
6	66	34			120	1606	75	.02	.08	13.50	23.00
7	66	34			115	1399	82	.02	.16	10.50	23.50
8	66	34	0		140	1575	89	.02	.01	19.50	20.00
9	66	34	0		150	1474	102	.01	.01	18.00	20.00
10	66	34	0		150	1567	96	.02	.04	15.00	23.00
11	66	34	0		145	1616	90	.02	.09	14.00	22.50
12	66	34	0		145	1595	91	.02	.06	14.50	21.50
13	66	34			145	1633	79	.02	.06	13.80	20.50
14	66	34			150	1566	96	.03	.03	14.50	23.00
15	66	34			145	1566	93	.01		15.00	17.00
16	66	34			140	1601	88	.04	.01	15.00	19.00
17	66	34			140	1726	81	.01	.12	14.00	17.50
18	66	34			150	1792	84	.04	.12	11.00	15.50
19	66	34			160	1870	86	.02	.11	10.50	13.00
20	66	34			190	2047	92	.01	.13	9.30	4.50
21	66	34			210	2122	99	.01	.09	9.50	15.00
22	66	34			195	1957	100	.01	.01	14.50	17.40
23	66	34	0		180	1853	97	.01	.01	14.50	17.00
24	66	34			160	1748	92	.01	.01	17.00	19.00
25	66	34			160	1717	93	.02	.01	12.50	19.00
26	66	34			165	1758	94	.01	.01	13.00	20.00
27	66	34			165	1700	97	.02	.02	13.00	20.00
28	66	34			170	1846	92	.02	.01	15.50	20.00
29	66	34			175	1850	95	.01	.01	15.00	17.50
30	66	34	0		175	1850	95	.04	.01	16.00	8.50
MEAN	65.7	34.3	0.	0.	156	1735	89.8	.02	.05	14.16	19.07

APPENDIX 1. MONTHLY OPERATIONAL STATUS REPORT–(CONTINUED)

WHITTIER NARROWS WATER RECLAMATION PLANT
COUNTY SANITATION DISTRICTS
OF LOS ANGELES COUNTY, CALIF.
JOHN D. PARKHURST - CHIEF ENGINEER & GENERAL MANAGER
*** SUMMARY OF OPERATIONS ***
JUNE 1974

DATE	KINETIC PARAMETERS													
	AIR RATES		COD		RETURN SLUDGE AERATION TIMES				MIXED LIQUOR AERATION TIMES			TOTAL AERATION SOLIDS		
	CUBIC FEET/ GALLON EFFLUENT	CUBIC FEET/ POUND COD REMOVED	REMOVAL %	AERATION SYSTEM LOAD (LBS.)	AERATION SYSTEM 1 (HRS.)	AERATION SYSTEM 2 (HRS.)	AERATION SYSTEM 3 (HRS.)	AERATION SYSTEM 1 (HRS.)	AERATION SYSTEM 2 (HRS.)	AERATION SYSTEM 3 (HRS.)	AERATION SYSTEM 1 (LBS.)	AERATION SYSTEM 2 (LBS.)	AERATION SYSTEM 3 (LBS.)
	98	99	100	101	102	103	104	105	106	107	108	109	110
1	2.50				2.17			3.26			53384		
2	2.49	1537	90.7	21453	2.19			3.26			51691		
3	2.47				2.18			3.24					
4	2.57	1251	91.4	26047	2.16			3.32			49548		
5	2.46				2.21			3.31			48430		
6	2.34	1349	87.0	24716	2.20			3.20			47488		
7	2.41				2.17			3.24			48005		
8	2.46				2.22			3.31			46254		
9	2.42	1394	90.4	23153	2.26			3.28			43610		
10	2.44				2.25			3.30			48489		
11	2.46	1296	90.2	24975	2.21			3.31			43918		
12	2.44				2.23			3.33			50549		
13	2.40	1423	90.2	22100	2.23			3.31			51575		
14	2.40				2.26			3.30			48122		
15	2.40				2.32			3.32			46512		
16	2.43	1419	91.1	22499	2.30			3.32			47304		
17	2.46				2.24			3.31			49748		
18	2.39	675	93.4	35918	2.25			3.24			51600		
19	2.42				2.31			3.29			56837		
20	2.46	758	94.0	40397	2.38			3.41			53426		
21	2.57				2.39			3.40			55344		
22	2.53				2.40			3.39			51916		
23	2.56	1600	89.7	20757	2.46			3.46			45912		
24	2.60				2.43			3.48			47028		
25	2.64				2.28			3.63			47363		
26	2.47				2.40			3.35			46871		
27	2.38	1359	89.7	23848	2.42			3.33			49023		
28	2.45				2.44			3.37			49023		
29	2.44				2.39			3.34			51816		
30	2.59	1689	91.5	19094	2.48			3.52			48289		
MEAN	2.47	1329	90.8	25413	2.29			3.34			49279		

APPENDIX 1. MONTHLY OPERATIONAL STATUS REPORT—(CONTINUED)

WHITTIER NARROWS WATER RECLAMATION PLANT
COUNTY SANITATION DISTRICTS
OF LOS ANGELES COUNTY, CALIF.
JOHN D. PARKHURST - CHIEF ENGINEER & GENERAL MANAGER
*** SUMMARY OF OPERATIONS ***
JUNE 1974

DATE	KINETIC PARAMETERS											
	MIXED LIQUOR SUSPENDED SOLIDS			COD LOADING		DAILY CELL RES. TIME	SOLIDS BALANCE				AVERAGE NET GROWTH	AVERAGE CELL RES. TIME
	AERATION SYSTEM 1	AERATION SYSTEM 2	AERATION SYSTEM 3	LBS.COD/LBS. TPVSS/DAY	LBS.COD/LBS. MLVSS/DAY		TOTAL PLANT SUSPEND. SOLIDS	WASTED SOLIDS	SEC. EFFLUENT SUSPEND. SOLIDS	DAILY NET GROWTH	#GROWTH/#SYSTEM SOLIDS/DAY	
	LBS.	LBS.	LBS.			(DAYS)	(LBS.)	(LBS.)	(LBS.)	(LBS.)		(DAYS)
	111	112	113	114	115	116	117	118	119	120	121	122
1	41447					7.4	70509	9122	400	10644	.131	7.7
2	40199			.42	.72	6.9	68422	9506	361	7781	.130	7.7
3											.139	7.2
4	38451			.53	.90	7.4	65184	8435	337		.128	7.8
5	38001					7.8	64001	7511	470	6998	.128	7.8
6	36609			.52	.88	7.5	61534	7556	703	5791	.129	7.8
7	37285					8.6	63529	6703	724	5422	.118	6.5
8	35810					8.9	60739	6403	395	4007	.117	8.5
9	34430			.54	.91	9.2	58208	5812	483	3764	.117	8.6
10	36987					11.3	63199	4885	718	10594	.113	8.8
11	34093			.56	.95	9.4	57955	5763	393	912	.110	9.1
12	39515					11.0	67037	5446	626	15154	.107	9.4
13	40663			.42	.72	10.2	69466	6290	553	9272	.103	9.7
14	37138					8.1	63300	7333	520	1686	.105	9.6
15	36005					7.9	61203	7280	480	5664	.105	9.5
16	37257			.48	.82	8.2	63119	7182	480	9577	.102	9.8
17	38860					7.7	65974	7766	791	11412	.104	9.6
18	41275			.38	1.13	7.2	69004	9015	532	12577	.105	9.6
19	44999					6.6	75805	10715	489	18205	.116	6.6
20	40684			.76	1.29	5.5	68997	11866	585	5644	.122	8.2
21	42480					7.2	73236	9570	548	14357	.129	7.7
22	40424					6.8	69303	9884	355	6306	.135	7.4
23	36486			.45	.76	6.5	61707	9116	349	1870	.143	7.0
24	36931					9.8	62637	5908	460	7297	.140	7.2
25	37138					7.4	63626	8230	347	9567	.141	7.1
26	37341					8.1	62947	7364	361	7046	.141	7.1
27	38475			.48	.80	8.1	65043	7612	408	10116	.139	7.2
28	39456					8.2	66296	7540	562	9355	.136	7.4
29	40447					8.6	68913	7401	404	10622	.129	7.8
30	37941			.39	.66	8.5	64496	7177	418	3178	.128	7.8
MEAN	38501			.519	.88	8.1	65358	7738	514	8172	.1228	8.24

COMPUTER APPLICATIONS IN AUTOMATION

William E. Dobbins
President, Teetor-Dobbins, P.C., 515 Johnson Avenue, Bohemia, NY 11716

INTRODUCTION

The computer, which has been widely utilized and accepted in power plants and industrial process control, is now being applied to wastewater treatment. Most of the initial applications have been for data logging systems, in which the plant variables are monitored and the data manipulated so as to present it in forms and units of greatest use to the operator. The data can also be stored on magnetic tapes from which it can be retrieved for future research. This is a great improvement over the old systems in which limited historical data can be retrieved, but only by being laboriously dug out of numerous recorder charts.

While data logging and processing constitutes an important step forward, the most important advance will be the application of the computer to plant operation. The computerized system has an important advantage over the system of numerous independent analog control loops; control actions can be based on algorithms which can utilize any or all of the variables. Thus, it can utilize calculated variables in arriving at decisions regarding process adjustments. The control capability of the computer goes far beyond that of the human operator, who, surrounded by dozens of meter indicators and recorders, cannot possibly react in time to prevent process upsets. The algorithms can be changed and tuned as fundamental process knowledge and knowledge of the peculiarities of the particular plant become available.

Two examples of computer algorithms for plant operation are presented in this paper. Both were developed at the two highly automated activated sludge plants in Bridgeport, Connecticut. One describes a program for the operation of the main raw sewage pumps and the other the results of a program which attempts to measure the respiration rates in the aeration tanks and the BOD of the sewage delivered to them.

PUMP CONTROL PROGRAM

At Bridgeport, two existing primary treatment plants were modernized and expanded by the provision of secondary treatment by the step-aeration version of the activated sludge process. At each plant the sewage is delivered through a large interceptor with its invert about 20 feet below the ground surface. It flows through a bar screen and a trapezoidal-shaped grit chamber to a wetwell, from which it is pumped to the primary treatment tanks. The pumping is done by three constant-speed and two 3-step-speed pumps. Both collection systems are combined sanitary and storm systems. At the West Side Plant the flow varies from about 12 mgd to 60 mgd; the East Side Plant flows are generally about one-half as much. Except for the magnitudes of the flows, the following discussion applies to both plants.

No control section was provided for the grit chamber, with the result that the depth of flow is determined by the level in the wetwell. In the old plant, the pump selections were activated by a float-operated control system by which the pumping rate at any given wetwell level was selected so as to provide an acceptable grit chamber velocity. However, a great deal of hunting took place, particularly for some of the individual pumps. Figure 1 shows the operating record in a typical day of one of the pumps. In such a control system, the combination of pumps running at any particular wetwell level is always the same, and the combination is changed when the level changes by some adjustable increment of about one foot. The basic reason for the excessive hunting is that the system cannot take the time frame into account. At some times it may require an hour for the incremental level change to occur; at other times it may take only five minutes. The computer program resolves this by continuously calculating the inflow rate and selecting pump combinations to pace this calculated rate. The algorithm is very simple:

Inflow rate = Outflow rate + Rate of change of storage

The computer calculates this rate every two minutes, from its knowledge of the present pumping rate and the relationship between wetwell storage and water level. From the tables of flow rates delivered by various pump combinations, which are stored in its memory, it selects the combinations which most closely produce the calculated inflow rates. Of course, it is not quite as simple as this. The program also maintains, within a designated band, the relationship between water level and inflow rate which results in an acceptable velocity in the grit chamber. One of the benefits of this program is that it automatically forces the inceptor to back up during storm flows, and thus make use of the storage in the collection system to moderate the inflow rates. That the program produces a very smooth flow pattern is demonstrated by Figure 2. This is a typical chart for the Parshall flume meter which measures the total pumping rate.

RESPIRATION RATE PROGRAM

A knowledge of the strength of the sewage being fed to the secondary system, and the rate of oxygen utilization in the aeration tanks, are essential to the implementation of various control strategies which are currently being studied by numerous investigators. Much of the attention has been on the development of on-line instruments for the measurement of TOC,

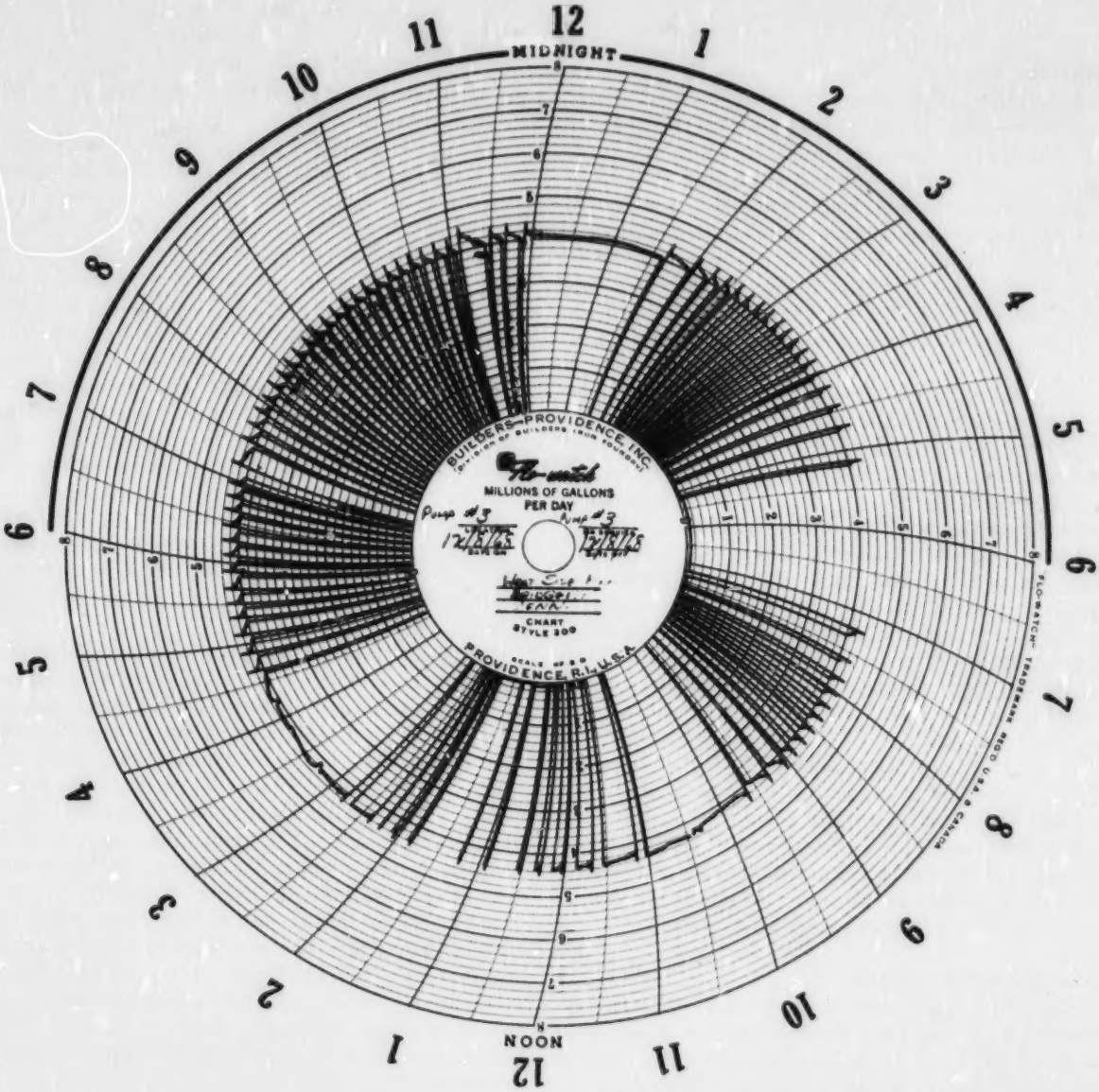

Figure 1. Pump Chart Showing Considerable Hunting
(Single Pump)

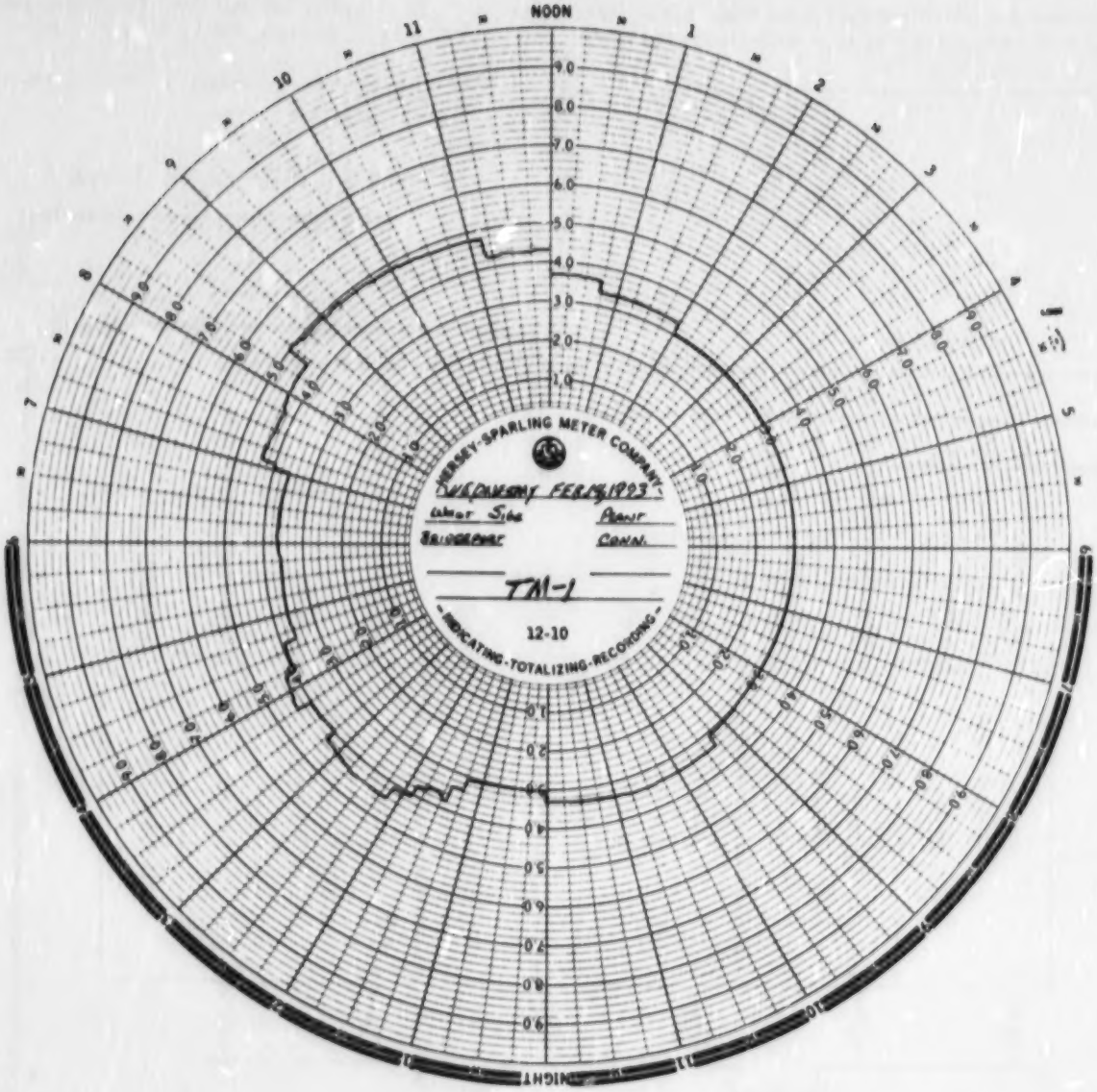

Figure 2. Chart of Parshall Flume Meter Showing Smooth Flow Pattern

COD and other parameters which might correlate with BOD. An attempt was made at the Bridgeport West Side Plant to develop a computer program which would utilize the operating condition of the aeration tank itself to evaluate the sewage strength and the current respiration rate.

The installation consists of three aeration tanks, each equipped with its own final settling tank, sludge return and sludge wasting facilities. Thus, it is possible to operate each system independently. A diagram of the Aeration Tanks is shown in Figure 3. When the program was developed the mode of operation was to return the sludge to pass No. 1 and to divide the sewage flow equally between the east and west ends. Thus, each of passes 2 and 4 received about one-quarter of the total sewage and pass 3 about one-half of the flow. The return rate was about 50% of the average sewage flow.

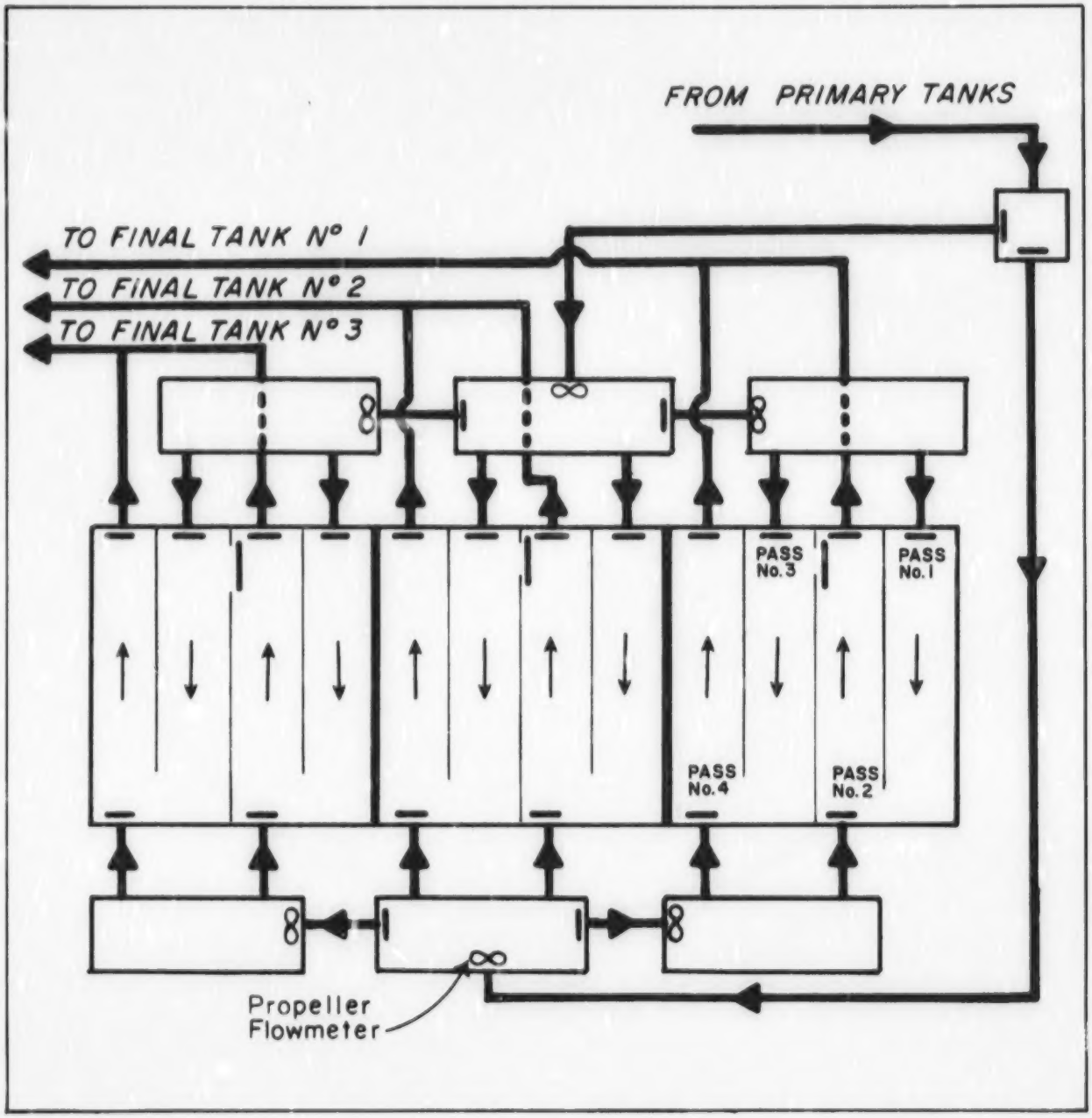

Figure 3. Layout of the Aeration Tanks

Program Logic

The program logic is based on the equations expressing the mass balance of oxygen in the aeration tank. It was actually applied to the three passes which received the sewage. The basic equations are:

A = Rate in by flow = $Q_s \bullet DOI + Q_r \bullet DOR$ (1)
B = Rate in by Air = $K_a Q_a (DOS - DOT)$ (2)
C = Rate out by flow = $(Q_s + Q_r) DOE$ (3)
D = Rate of change within tank = $\Delta DOT \bullet V / \Delta t$ (4)
R = Rate of respiration within tank

In these equations:

Q_s = Total flow of sewage, MGD
Q_r = Flow of return sludge, MGD
Q_a = Flow of air, cfm
DOI = Dissolved oxygen in influent sewage, lb/MG
DOE = Dissolved oxygen in tank effluent, lb/MG
DOR = Dissolved oxygen in return sludge, lb/MG
DOT = Dissolved oxygen in tank (average), lb/MG
DOS = Dissolved oxygen saturation value, lb/MG
V = Volume of the 3 passes, MG
Δt = Time increment, days
K_a = Coefficient relating to oxygenation efficiency

The mass balance relationship is:

$$R = A + B - C - D \quad \text{lbs/day} \tag{5}$$

All of the factors in this equation, except R, DOS and K_a, are fixed quantities or measurable variables. DOS is computed from the temperature of the water and the known depth of submergence of the air diffusers. Therefore, by determining either K_a, or R, the other would be determined. The value of K_a, for the particular operating conditions could really only be estimated and there would be great uncertainty about it. R could be subject to measurements on samples of the mixed liquor. Once reliable values were established, the respiration rate could be calculated periodically.

Field Measurements

During September, 1973, various attempts were made to measure the respiration rates on samples of mixed liquor by taking them to the laboratory, aerating them and measuring the DO values with a portable DO probe. As expected, the rates varied considerably from place to place in the tank and from time to time at each place. It was decided that it would require a great deal of work to accurately determine the profiles of respiration values that would be necessary for the evaluation of K_a. Therefore, a different approach was taken. The respiration rate for the tank as a whole might be expressed as:

$$R = K_b (BODI - BODE) Q_s + R_e \tag{6}$$

where BODI and BODE are the 5-day BOD's of the influent and effluent sewages, R_e is the endogenous respiration and K_b a coefficient. This equation was proposed some years ago by Eckenfelder and O'Connor (1). The detention time of the sewage in the three passes varied from 2 to 4 hours and averaged about 3 hours. Therefore, the total weight of added BOD, contributed by the sewage present in the tank at any one time, could be estimated as some factor times the weight added during the previous interval plus a lesser factor times the amount added during the second previous interval, etc. The use of this equation introduces two new factors, K_b and R_e, to be determined along with K_a.

During a 24-hour period in July, 1973 an attempt was made to calibrate the system by the use of equations (5) and (6). DO probes were placed at the influent sewage distribution chamber, at the exit end of pass 4 and at four other points within the tank. Every hour, on the hour, a sample of the influent sewage was taken and three dilutions were set up for subsequent determinations. Unfortunately, no effluent samples were taken, because of the lack of sufficient BOD bottles, as well as sufficient time. The computer was programmed to log out the values of the sewage flows, air flows and DO readings every 12 minutes. Study of the data showed that a good value for Δt was one hour. This eliminated most of the noise in the readings and showed smooth patterns of change. Equations (5) and (6) were combined in the form

$$BODI = \frac{A + B - C - D + E}{K_b \bullet Q_s} \tag{7}$$

in which the term E represented the magnitude of $K_b \cdot BODE \cdot Q_s - R_e$. When the lab BOD data were turned out (5 days later) all of the data were then available to fit to the equations. The values of BODI and Q_s used in the fitting were the weighted values over the previous three hours and the other values were the averages for the previous hour. This provided 21 sets of data which could be fitted to the equations, although there were only 3 unknowns. The fit was made by the method of least squares, with the following results:

$K_a = 0.0901$, $K_b = 0.314$, $E = 55.0$

Figure 4 shows the computed BOD values compared to the measured ones, and Figure 5 shows the computed respiration rates. It is noted that the BOD values are the 3-hour composite values, whereas the respiration rate is the average for the previous hour. Although the effluent BOD's were not determined, the plant effluent values were generally around 25 mg/l during that month. Also, the average mixed-liquor volatile suspended solids were about 800 mg/l. Assuming that these prevailed during the test period, and from the value of E = 55 lbs/day, the following is derived:

R = Oxygen used up = 0.314 x BOD_5 removed + 0.0357 x lbs of MLVSS (lb/day)

Although they seem to be somewhat low, the coefficients are in the range of reported values.

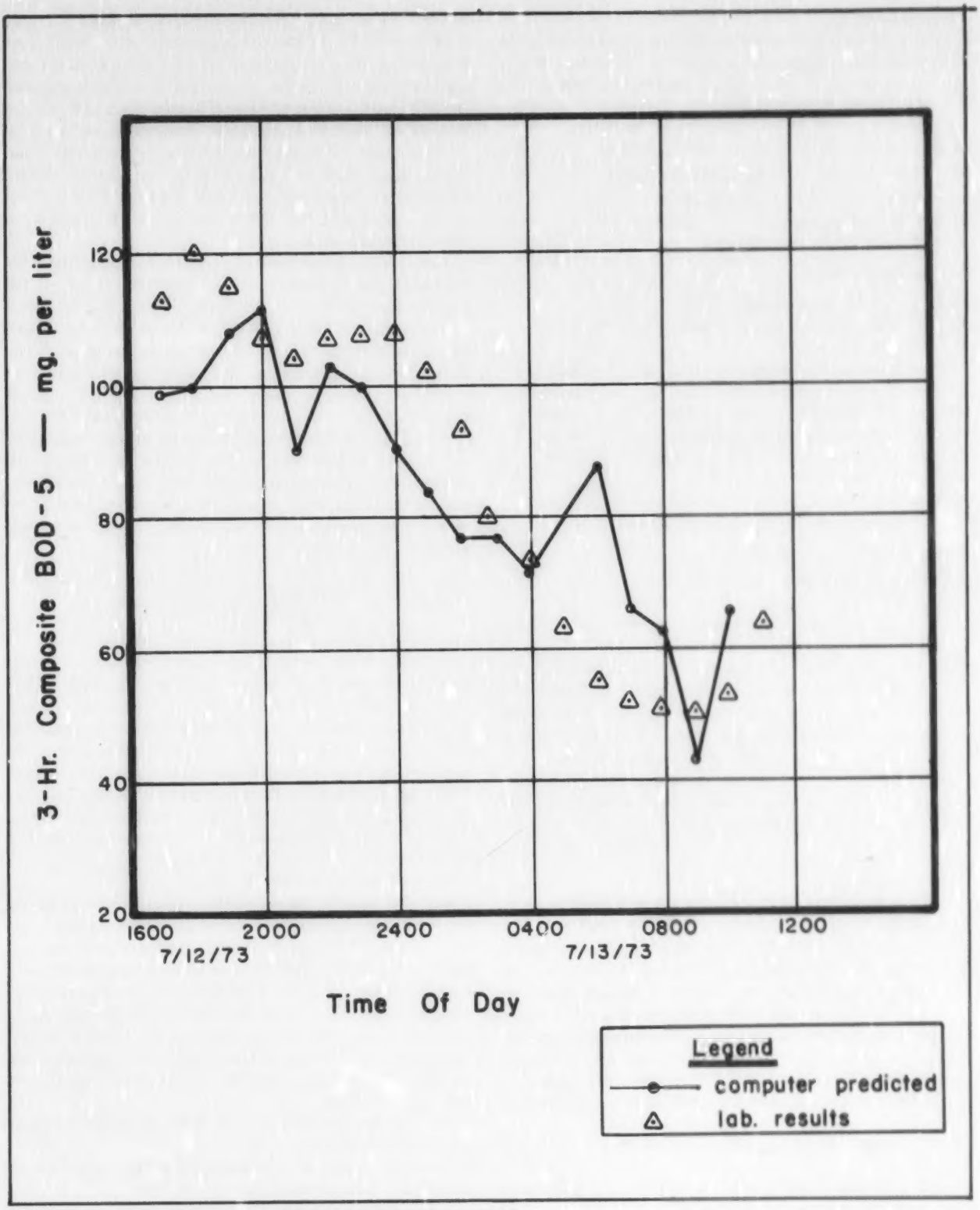

Figure 4. Comparison of Computer Calculated BOD With Lab Measured BOD

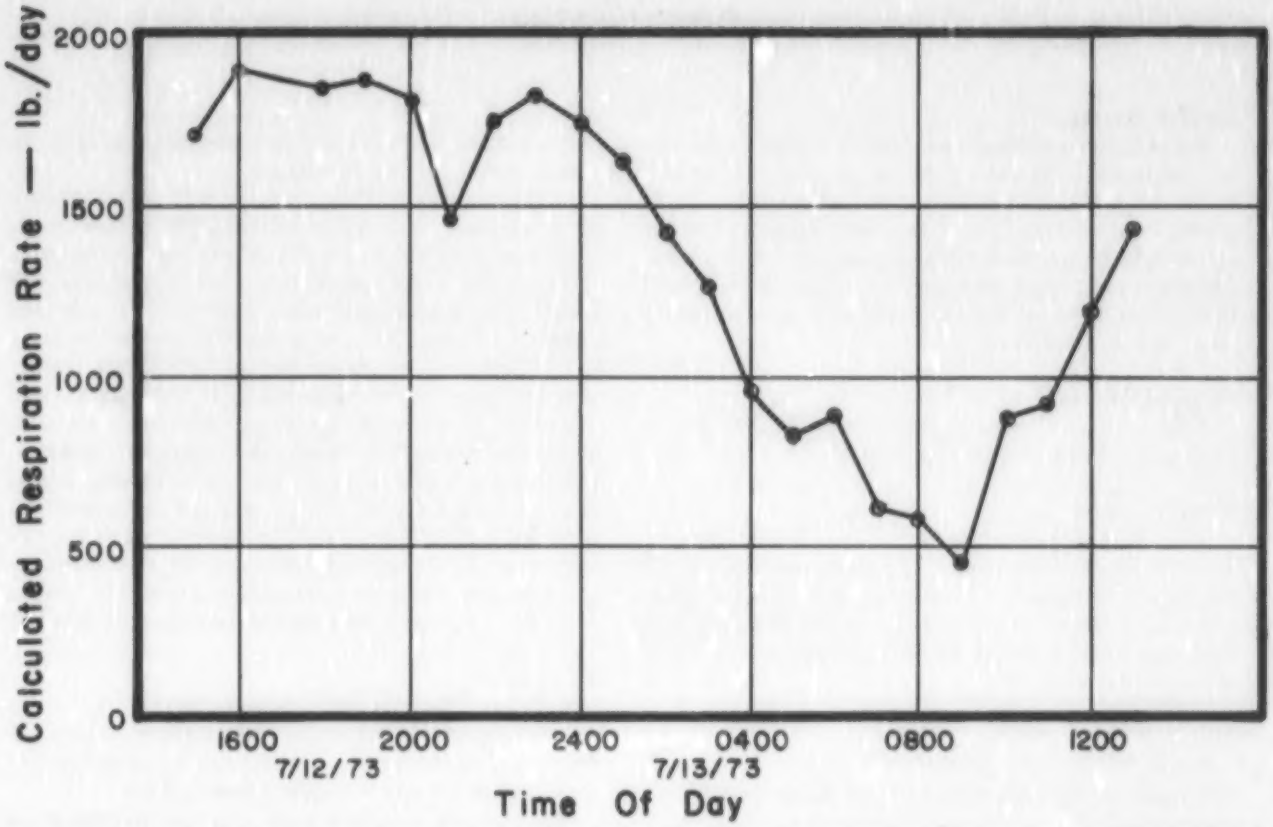

Figure 5. Calculated Respiration Rates

DISCUSSION

The computer was programmed using the values previously derived for the coefficients and it printed out the computed BOD values on the hourly log. It was done individually for each of the three aeration tanks, to provide a check on the values. They all fell within the general range of expected values. The values for Tanks 1 and 3 agreed quite well and those for Tank 2 were consistently low, a condition which can be attributed to faulty meter readings.

The values of the three coefficients are influenced by the temperature of the sewage and will, therefore, be subject to change. The temperature of the sewage at Bridgeport does not usually vary greatly within the day, but is subject to a wide seasonal variation. A program was written whereby the coefficients can be updated every three days. The previous equations can be summed to represent the composite BOD for a 24-hour period. The resulting equations for this calculated composite contain the three unknown coefficients. The actual composite BOD for the same 24-hour period is determined in the lab. When three sets of data are determined, the lab results are typed into the computer and the computer then solves the three simultaneous equations to up-date the three coefficients. They will obviously have a built-in lag of 5 days. However, because the seasonal temperature changes are quite gradual, the errors should not be substantial. This program has not yet been implemented.

It is believed that the results are quite promising and that this program can be very useful. It is also believed that it can be improved in several ways. For example, the effluent BOD should be incorporated into the program. Also, the air flow readings should be adjusted to standard conditions from the readings of air temperature and pressure. The endogenous respiration rate might be expressed as a factor times the measured concentration of mixed liquor suspended solids. Additional work should result in the development of a reliable program for the evaluation of this very important calculated variable.

REFERENCES

1. Eckenfelder, W. W., Jr. and O'Connor, D. J., "Biological Waste Treatment," Pergamon Press, New York, NY (1961).

DISCUSSION

Joseph F. Roesler:

The installation of a computer can be considered as upgrading a wastewater treatment plant. Or computers can be considered as O&M tools, especially if they are used for data acquisition and handling. I would appreciate comments from the various EPA regions in regards to the region's policy towards awarding construction grant money for computers. Secondly, I would appreciate any one else's comments on what EPA's policy should be and why?

Michael K. Stenstrom:

From a manager's point of view, how much calibration of Dissolved Oxygen probes can you afford?

Walter W. Schuk:

To provide some guidelines for instrument manufacturers it would be helpful if treatment plant management would define the meaning of reasonable maintenance in more detail. Please give your definition, including both the frequency and manhours that would be considered acceptable for maintenance of an on-line analyzer.

Allen E. Molvar:

Would Mr. Garrison comment on the expected benefits of flow equalization, particularly in terms of potential process improvement?

Heinrich O. Buhr:

The development of a method for calculating the respiration rate in an activated sludge system, as in Equation (5) of Dr. Dobbins' paper, is an important step towards the goal of controlling the respiration rate per unit mass of sludge, or specific oxygen utilization rate (SCOUR). It may be shown, from the classical substrate and sludge mass balance equations, that a constant value for SCOUR also means a constant specific growth rate, constant F/M ratio and a constant value for soluble BOD in the effluent. Keeping these parameters constant further holds out the promise of more consistent sludge settling characteristics, and it seems likely that SCOUR control will become one of the most useful concepts in automatic control of activated sludge plants.

Once a value for R, Equation (5), is available on a regular basis, the practical implementation of SCOUR control would be to calculate the sludge concentration required in the aerators, and then to control the sludge return rate appropriately. For example, if primary flow rate, Q_s, RAS return rate Q_r, and, say, RAS concentration, X_r, can be measured, then the RAS flow rate required will be

$$Q_r = Q_s \cdot X_{required} / (X_r - X_{required}),$$

if sludge growth in the aerators is ignored for practical purposes. As Dr. Dobbins pointed out, one of the advantages of a computer-based system is that it facilitates the implementation of such multi-input control strategies.

In a system which is subject to strong diurnal load fluctuations, the maintenance of a constant SCOUR will dictate equivalent variations in the sludge content of the aeration tanks. This infers that sludge storage capability will be required, well beyond what could normally be provided by the secondary settlers. Apart from the use of storage tanks, one way of tackling the problem is to employ the step feed process, where a portion of the aeration basin at the head of the plant is used essentially for sludge storage during periods of low flow. Another method, which reduces the variation in sludge requirements, would be to reduce incoming load fluctuations by providing equalization capacity, as proposed by Mr. Garrison. Front-end load balancing should certainly be recognized as a valid control technique, and, in general, an appropriate balance should be struck between more equalization capacity, on the one hand, and more complex in-plant control, on the other.

Peter C. Young:

(Editor's note: Dr. Young has combined his comments on the individual workshop topics into a single document, which is given under this section because of the particular applicability of many of his remarks to computer-based systems.)

This Workshop has raised many important questions about research needs for the automation of wastewater treatment systems. But the term "automation" has, I feel, been interpreted in a rather narrow sense, with much of the discussion centering on the automation of existing manually operated processes without considering, in anything but fairly superficial detail, the possibility of improving these processes by the utilization of advanced control systems analysis and design methodology.

We have, for example, talked at great length about the limitations of existing sensors and the need for research into the development of improved or entirely new sensing devices. But automatic control is not only concerned with the measurement of variables; important as they are, sensors are only one aspect of control system design. And the modern approach to systems analysis and control systems synthesis requires an integrated approach to the design problem, with the sensor requirement studies proceeding in parallel with equally important investigations such as system modelling, simulation and overall control system design.

It might well be, for instance, that a better understanding of the dynamic process, obtained by thorough modelling exercises, could lead to the design of new types of control schemes whose sensor requirements might not necessarily be the same as existing designs. In other words, there is a need for continual cross-fertilization of ideas from different component

areas of research if the final automated system is to attain its full potential. To give but one example: there has been a great deal of discussion on BOD measurement and the need for obtaining estimates of BOD more rapidly than at present. And yet it might be that future research into control systems design will negate the requirement for BOD measurement, either because variables other than BOD are found to be more useful for control purposes or, alternatively, because good statistical estimates can be obtained in real time from other more easily obtainable measurements.

My plea is simply that we do not close our eyes to the possibility of radical innovation at this early stage in the study of wastewater treatment automation, but rather that we keep all options open, bearing in mind the kind of developments which may be possible if an adequate program of research in systems analysis and control systems design is undertaken. At least it is incumbent on those who authorize and finance research in the area to promote studies which encompass **all** important aspects of the problem: they should not, it seems to me, allow themselves to be unduly influenced by groups who represent only certain special, albeit important aspects of the problem and who may not be cognizant of developments in areas outside those covered by their own expertise and interests.

Of the more detailed topics we have considered at the Workshop, I feel that there is need for some clarification on the adequacy of dynamic models. When describing a dynamic system in mathematical terms, it should be emphasized that there is not one, all-encompassing dynamic model—some, as it were, universal panacea to all modelling problems. Rather there is a **whole family of models** having different degrees of complexity depending upon the nature of the problem for which they are formulated; indeed, it could be argued that one of the major arts of systems analysis is the choice of a mathematical model **which suits the nature of the problem at hand.**

In this latter sense, the more complicated and detailed models, such as those considered by Dr. Andrews, are **simulation** models aimed first at deriving a better understanding of the physico-chemical and biological nature of the process, and second at providing a vehicle for assessing the possible efficacy of different control strategies before these are implemented in practice. Provided such models are developed and used with care and, in particular, provided the user does not succumb to the inherent danger of believing that his model is the system and not merely a mathematical model, then such modelling exercises can be extremely useful, providing as they do a natural prelude to systems analysis and control system design.

But it should be realized that complicated simulation models are, more often than not, unsuitable bases for analytical control system design. For these tasks, the systems analyst requires much simpler and more analytically tractable models which reflect the **dominant dynamic modal behaviour** *(i.e.*, the behaviour of the **dominant modes** that characterize the system response to excitation), without including the extraneous details *(i.e.*, extraneous to control system design requirements) that tend to characterize a thorough micro-analysis of the process. For example, it has been established recently (1,2) that a simple second-order differential equation model can explain the dominant daily variations of DO and BOD in a non-tidal river system, even though we know that the detailed behaviour is much more complex. In many examples it would seem that the multitude of higher-order, nonlinear and stochastic effects that naturally characterize the detailed operation of the system tend to combine in their overall effects and can often be represented in gross or **macro** terms as additive stochastic disturbances with fairly simple statistical properties: it is as if there is a **Law of large systems**, somewhat analogous to the well known **Law of Large Numbers**, so that, while the system is exceedingly complex, its overall small-perturbation response characteristics can often be quite simple in form, apparently dominated by a clearly defined and, more often than not, linear mode of operation.

It seems to me that the importance of the above points in relation to the automation of wastewater treatment systems is that, while excellent work is being carried out in the simulation modelling area and a growing understanding of the problem is emerging, there appears to be no determined research effort in the other modelling areas. And this is despite the fact that analytical techniques such as model identification, parameter estimation and evaluation are available and have been applied with reasonable success to other related problems, such as the analysis of water resource systems and chemical processes (3,4).

To consider one example where available analytical techniques may be of use, the question of rainfall prediction has been raised in connection with wastewater collection systems. Such problems are closely related to the flow forecasting problems encountered by hydrologists and recent work on flow forecasting which uses sophisticated but relatively simple recursive methods of time-series analysis (3,5) may well have potential in the analysis of wastewater collection systems; certainly initial reference to these techniques could provide important *a priori* information for research workers dealing with such problems.

Another analytical technique developed in the control systems area which appears to have reasonable potential for application to wastewater treatment problems is the numerical filtering of noisy data from dynamic systems—or, as it is often called in the technical literature, **state variable estimation** or **Kalman filtering** (6). This approach to data processing provides a method for using the measured variables (which will almost certainly be corrupted by measurement noise or subject to uncertainty of some type) to **reconstruct**, on a firm statistical basis, **estimates** of any unobserved or non-measurable variables that characterize the process dynamic behaviour while, at the same time, helping to filter off the measurement noise effects from the measured variables.

A heuristic *(i.e.*, intuitive, not based on rigorous analysis or

derivation) and largely deterministic analog of such a procedure is the estimation of BOD as suggested by Dr. Dobbins. In effect, the available analytical techniques are able to put such heuristic procedures on a firm statistical base, so making them more systematic to design and potentially more reliable. Of course the analytical techniques, like their heuristic relatives, require a simple dynamic model of the process which explains the dominant model behaviour; thus the provision of an adequate mathematical modal is once again seen to be an inherent requirement of system design.

Another extremely important point raised in the Workshop discussion is the use of computers in automation. Although many of the advantages arising from the use of computers have been mentioned, I feel there has been insufficient emphasis on the fact that one of the major attractions of having a computer as part of the operation is that it enables the designer to consider the integrated control of the **whole** system: no longer does he only have to consider the local control of unit processes, but he can also consider the interaction of such processes and the design of control schemes that allow for such interaction. And because the computer is such a powerful tool, the designer can, at the unit process level, also consider the design of a control system that acknowledges the multivariable (*i.e.*, multi-input, multi-output) nature of many unit processes (7,8) and takes account, for example, of factors such as the stochastic nature of the process and the overall objectives.

Of course, the sophisticated use of computers in control system design holds many problems, most of which still have to be solved. But there is no doubt that an important research need is for people in the wastewater treatment field to become acquainted with recent developments in advanced computer control so that at least they are able to judge the claims of over-enthusiastic control system design consultants! There is no doubt that in the next few years at least some of the techniques which are at present only gleams in the eyes of the researcher will come to fruition.

Finally, lest it be thought that I am over-emphasizing the need for research on advanced systems analysis, it should be stressed that I am recommending here the use of techniques which, for the most part, have proven practical potential in other areas of application. Indeed, I am a firm opponent of innovation for its own sake and would urge great caution in considering the use of some of the more advanced concepts in systems design such as **self-adaption** and **optimality**.

Such concepts are, of course, extremely tempting because they seem to offer solutions which, in the one case are able to counteract the effects of possible changes in the controlled process, and in the other are "best" in some sense. But it is only fair to point out that both approaches to control system design have not been particularly successful when applied to real (in contrast to simulated) systems. Even in the aerospace field for example, where the need for adaptive adjustment of control gains is emphasized by the large and rapid changes in vehicle dynamic characteristics that occur because of the rapidly changing environment, the only **widely used** method of adaption is the **schedule adaptive** system, in which the control gains are pre-programmed to vary as functions of "air data" variables such as dynamic pressure, altitude, Mach number, etc.; true **self**-adaptive control, in which the system adjusts itself without considerable *a priori* information, has been used on relatively few occasions and then mainly for advanced "one-off" research aircraft.

In the case of dynamic optimal control the picture is much worse. First of all, it should be realized that the system so designed is only optimal in the sense that it achieves the extremum (max. or min.) of some **chosen** performance objective or cost function; there is no guarantee that this cost function is necessarily the best available such function, or even that a suitable **analytical** statement of the desired performance objective can be established at all.

An example of the inappropriate use of optimal control is the popularity of the "Linear-Quadratic" (L-Q) approach to optimal control system design which received so much attention in the period 1960-1970 (9). A considerable amount of time and money was expended on the design of optimal systems to this kind of specification even though, in its basic form, the resulting control law does not include integral action, so that the resulting controlled system can have rather undesirable steady-state performance characteristics. (In particular, the resulting controlled system can be extremely sensitive to the unavoidable uncertainty in the model parameters and can be characterized by considerable steady-state error to setpoint or constant input commands). While this is not the only undesirable aspect of L-Q optimal designs (10) it is, perhaps, one of the principal reasons for the notable lack of success of such design procedures during the 1960's; certainly the need for inherent zero steady-state offset to set point inputs, as provided by integral action, is one of the principal requirements of most practical control schemes, and the fact that a considerable period of time passed before this disadvantage was diagnosed and corrected (see for example Young and Willems (10)) illustrates the dangers introduced by the uncritical use of theoretical design procedures.

It is because of such mistakes as these in the past that I urge the support of a strong program of research into advanced control systems analysis and design for wastewater treatment processes; I am sure that if an enlightened program of research is initiated now, such aberrations are less likely to occur. A healthy body of control systems specialists will become firmly established; specialists who will be able to judge the utility of new innovations within the context of wastewater treatment and so, in the words of the preamble to this Workshop, help to realize the many potential benefits offered by automation.

REFERENCES:

1. Young, P. C. and Beck, M. B., "The Modelling and Control of Water Quality in a River System," *Automatica* (1974) (in press).
2. Beck, M. B. and Young, P. C., "A Dynamic Model for DO-BOD Relationships in a Non-tidal stream," *Water Res.* (to be published).
3. Young, P. C., "Recursive Approaches to Time-series Analysis," *Bull. Inst. of Math. and its Applications (I.M.A.), 10*, No's 5/6, 209-224 (1974).
4. Astrom, K. J. and Eykhoff, P., "System Identification: A Survey," *Automatica, 7*, 123-162 (1971).
5. Young, P. C., Shellswell, S. H. and Neethling, C. G., "A Recursive Approach to Time-Series Analysis," Tech. Report No. CUED/B-Control/TR16 (1971), Engineering Department, University of Cambridge, England (1971).
6. Kalman, R. E., "A New Approach to Linear Filtering and Prediction Theory," *Trans, ASME, J. Basic Eng., 82-D*, 35-45 (1960).
7. Macfarlane, A. G. J., "A Survey of Some Recent Results in Linear Multivariable Feedback Theory," *Automatica, 8*, 455-492 (1972).
8. Macfarlane, A. G. J., "Relationship Between Recent Development in Linear Control Theory and Classical Design Techniques," Third IFAC Symp. on Multivariable Technological Systems, Manchester, 16-19 Sept. 1974.
9. Special Issue on Linear, Quadratic Gaussian Problems, *IEEE Trans. on Automatic Control, AC-16*, No. 6 (1971).
10. Rosenbrock, H. H. and McMorran, P. D., "Good, Bad or Optimal," *IEEE Trans. on Automatic Control, AC-16*, No. 6, 552 (1971).
11. Young, P. C. and Willems, J. C., "An Approach to Multivariable Servo-mechanism Problems," *Intl. Jour. Control, 15*, 961-979 (1972).

CLOSURE

(Editor's note: In preference to submitting a closing statement, Messrs. **Garrison, Payne and Haug** have modified their paper in the light of the points raised during the discussion.)

W. E. Dobbins:

The question has been raised as to what is an acceptable level of maintenance requirement for various water quality sensors. The experience in Bridgeport, as reported by the Instrument Engineer, is as follows:

D. O. Probes: The three step-aeration tanks have a total of 18 probes—general maintenance, including cleaning, membrane and electrolyte replacement and calibration, requires about 5 man-hours per week.

Suspended Solids Meters: Six meters of the optical type require about 2 hours per week, principally for lens cleaning and calibration. This moderate requirement was after the installation of a simple automatic flushing system utilizing a tuner and two small electrically controlled valves (see article in WPCF "Deeds and Data" October, 1974).

Water Quality Analyzer: An on-line water quality analyzer has probes for pH, conductivity and temperature, and wet-chemistry analyzers for chromate, cyanide and copper. A total of about 9 hours per week are required to keep the system operating satisfactorily. The work for the most part is cleaning the probes, and replacing filters in the pretreatment system.

The total effort consists of about 16 man-hours per week. The Instrument Engineer estimates that one adequately trained technician can keep the systems in both of the treatment plants in generally satisfactory operating condition. In the writer's opinion, this is an acceptable requirement for these plants in which the total operating personnel numbers about 80.

Report of Working Party on RESEARCH NEEDS for COMPUTER APPLICATIONS IN AUTOMATION

Carmen F. Guarino
Commissioner, Philadelphia Water Department,
1160 Municipal Services Building, Philadelphia, PA 19107
John M. Smith
Chief, Municipal Treatment and Reuse, National Environmental Research Center,
Environmental Protection Agency, Cincinnati, OH 45268

INTRODUCTION

Computers are being widely used to expedite work in the chemical process industry and to economize the endeavors of man. To date, computer application in the wastewater treatment field has been minimal. The use of computers will solve many problems that presently confront the effective treatment of domestic and industrial waste.

Without the use of computers, it will be impossible to meet the requirements of P.L. 92-500 and other related laws concerning the control and treatment of pollution. Presently, there is little control of the treatment process and this is more obvious in the smaller plants than the large. The only way that we can adequately control the treatment system is through the development of instrumentation and automation.

We must have some method whereby the process is monitored continuously, not once every 24 hours or once a week which is the case in many small plants. Remembering that there are far more small plants than large plants, this does have a tremendous impact on national pollution control and treatment. The development of model systems that can be applied to both small and large plants will result in effective

treatment and in a reduced cost of treating wastewater.

There is very little regulation of energy used in treatment plants today because we do not have adequate control. There should be no doubt in our minds that there would be a tremendous saving of energy as well as materials if we only applied them as necessary, and not on a routine basis as is now being done. A check of most activated sludge plants will reveal that they usually use the same number of blowers to supply air at 3 o'clock in the morning as they do at 3 o'clock in the afternoon. Yet, conditions usually vary greatly at these hours. Over a period of time, the prudent use of power nationally would amount to a great saving.

Instrumentation and automation will furnish the best treatment at the least cost.

PROBLEMS

1. The application of computers to wastewater treatment systems is new. Consequently, there is a primary need to assemble all information from both the national and international viewpoint. The first problem is the lack of a complete computer library as applied to wastewater treatment systems.
2. The unavailability of suitable models to simulate the treatment process.
3. The absence of reliable sensors to monitor important process variables. This limits the use of models and computers at this point in time.
4. For the most part, the wastewater treatment system is treated separately from the collection system. For effective treatment and the most effective automation, the system must be considered and made one. The absence of sufficient information as to the dynamics of sewer collection as well as the impact of rainfall, infiltration, and means of controlling flows in the wastewater treatment system limits the most effective use of the computer.
5. There are many specialists in the wastewater treatment systems field and there are many specialists in the use of the computer, but there are very few people that understand both. Consequently, this limits the full application of the computer in solving the problems of the wastewater treatment process. There is a need for greater education to produce personnel who understand both facets of this work.

Summary

Successful computer application will require educated and trained personnel, reliable sensors, and time-tested and available mathematical models.

RESEARCH NEEDS

1. **Education**--complete knowledge of the wastewater treatment process and complete knowledge of computer applications.

   It was obvious at the Workshop that the treatment specialists and computer specialists were not able to completely communicate. Before the treatment process will be successfully computerized, we must have a clear understanding of the treatment process as well as the application of the computer.
2. Development of **reliable sensors** which can, on a real-time basis, monitor the treatment process. These instruments would include:
   a. B.O.D.
   b. C.O.D.
   c. Suspended Solids--mixed liquor suspended solids
   d. Sludge density
   e. Sludge blanket level detectors
   f. Ammonia and nitrate
   g. Biological activity indication
   h. Flow measurement in the collection system
3. Preparation of basic **models** which can be made available to those who are attempting to automate the treatment processes.

   There should be two types of models; one that can be used effectively with the present knowledge of the treatment process as well as the present knowledge of sensors; and another to make allowances for the sensors which are being developed.

   Models worthy of development are:
   a. Activated sludge process and all its modifications
   b. Chemical treatment
   c. Aerobic sludge digestion
   d. Anaerobic sludge digestion
   e. Collector system control

   All of the above, of course, have many variations depending on the particular process chosen; for example, under 'Chemical Treatment', adsorption could be included, etc.
4. **Test and evaluate models** on a pilot plant basis. There is a great need for a pilot plant which can be used to both formulate and test models. This would be the greatest contribution made towards exploring the use of computers in controlling the treatment process. Proper pilot plants and proper personnel could develop and de-bug models which could then be made available for use.
5. Establish some unit that would serve as an **information center** for all agencies working towards the automation of the treatment process. This central office would serve many purposes, from information dissemination to continuously updating and improving models and sensors.
6. **Integration of treatment system with collection system.** The collection system, through the use of computers, can be the first step in the treatment process. Control of the flow to the treatment plant, through effective use of the collector system, has many advantages from flow equalization to being able to treat more flow, particularly during rainstorms.
7. **Inter-relationships in the treatment process** should be

clearly defined. In order to computerize the system, a program must be written. A program cannot be written until the process can be clearly defined.

8. **A complete technological assessment of wastewater treatment via computer applications** is required. The assessment should include, but not be limited to, the following:
   a) Social and psychological implications
   b) Economics
   c) Risks, liability, etc.
   d) Man/machine interfacing
   e) Political and regulatory implications
9. Determine the **role of the computer** in wastewater treatment with respect to matching the size and the type of computer (full-size, mini, micro-processor or analog control) to the plant size and the planned function (control, data acquisition, scheduling, accounting, etc.) of the computer.
10. Determine **specifications** or guidelines in the **selection of a computer** for a particular facility. Preferably, the guidelines should be presented so that the function of the computer is described and related to the size and type of computer required.
11. Large-sized wastewater treatment systems display a potential for using a **centralized computer** for data acquisition, monitoring by use of the central computer and finally using the central computer to assist in the preparation of the monthly state report. Programs should be written for this application and the concept should be demonstrated.
12. Using a centralized computer and several satellite plants, each having a terminal, demonstrate the effectiveness of using a **man-in-the-loop** to control each plant by communicating with the computer.

EVALUATION OF THE EFFECTIVENESS OF AUTOMATION

Preceding page blank

EVALUATION OF THE EFFECTIVENESS OF AUTOMATION

Joseph F. Roesler
Pilot & Field Evaluation Section, Advanced Waste Treatment Research Laboratory,
National Environmental Research Center, Cincinnati, OH 45268.

The relative value of automation in the field of wastewater treatment can only be determined by accurately evaluating the effectiveness of the various automatic control strategies. Careful planning of an evaluation is such an important task that failure can almost be guaranteed if adequate planning is neglected. Two methods that can be used for evaluating the effectiveness of automating a wastewater treatment plant are field evaluation and desk-top computer simulation. Important and interrelated parameters in any such evaluation are cost-effectiveness of the control strategy, performance improvements, and energy requirements. This paper describes the criteria that should be considered in planning an evaluation and presents field data from several evaluations sponsored by the U. S. Environmental Protection Agency (EPA). Problems encountered and some of the final conclusions are also included.

EVALUATION TECHNIQUES

The usual technique employed in field evaluation is to compare the performance of a manually operated plant with an automated plant; however, the standards for manual operation vary according to the idiosyncrasy of each plant. Plant layout, piping, type of sewage, etc., may affect the ease with which the plant is manually operated. There are no baseline data available that show the performance of a well-run typical wastewater treatment plant. Therefore each performance evaluation is a comparison of automatic versus manual operation at only one plant, and each performance evaluation requires an exacting definition of the manual operating procedures.

Before beginning an individual plant evaluation to assess automation performance, the operator-manager attitude must be carefully evaluated. In some cases, operators believe that the security of their jobs is threatened by automation. In such cases, the instruments and automatic control loops will be placed under the most severe test conditions possible and may thus "fail." The cause of the failure may be neglect or even sabotage of the equipment by the operators. On the other hand, operators and managers may welcome automation; however, because of their inexperience with the equipment and lack of proper training, the equipment may still "fail" because of unintentional neglect or faulty maintenance.

Negative attitudes must be corrected. Assurances must be given that the operator's job security is not threatened. Adequate instructions must be given to operators and managers. In plants installing a digital computer, instruction must be given to the managers so that they comprehend the needs and requirements of such an installation.

Many plants are symmetrically constructed, giving rise to duplicate systems. In such cases, the tendency is to compare the automatic control of one stream with a manually controlled duplicate stream. In such a comparative evaluation, the "Hawthorne" effect (1) must be considered. The classic studies at Hawthorne, Illinois, were conducted by the Western Electric Company in the late 1920's. The results of this research indicated that the employees' behavior and attitudes toward their jobs and toward management are conditioned to a considerable extent by the values, standards, and expectations of the work groups to which they belong. Thus there is an excellent possibility that operators working on the manually operated portion of the plant will work harder and more diligently to demonstrate that man is superior to machine, thus invalidating the comparative test results.

COMPARATIVE FIELD EVALUATIONS SPONSORED BY EPA

Once the group behavior problems are eliminated, simultaneous comparative evaluations will yield excellent and reliable results. An example of such an evaluation *(i.e.*, without the group behavior problems) is the dissolved oxygen (DO) study recently carried out at the U. S. EPA's Pilot Plant at Blue Plains. The objective of the study was to determine the

effect of DO level on filamentous growth by comparing the performance of two automated control strategies against one another. Both systems were operated at a level of 1 mg/l for a period of five sludge retention times (SRT's) without incurring sludge bulking problems. One system (D system) was then operated at a DO level of 3 mg/l, while the second system (E system) was maintained at a DO level of 1 mg/l. After five SRT's, the sludge volume index (SVI) of the D system increased to 200-300, while the SVI of the E system remained at a level of about 100. The DO level of each system was then set at 1 mg/l for a period of five SRT's, thus causing the SVI of the D system to decrease to 50. This simple comparative test makes the dramatic point that DO setpoint does have an influence on the sludge handling characteristics.

Two other DO studies in which the comparisons (manual versus automatic) were sequentially performed are next described. One of the studies, at Renton, Washington (2) tends to confirm the above observations, but no such clear confirmation resulted from the second study, conducted at Palo Alto, California (3). Though it is too early to come to any conclusions, it appears that the nature of the comparative tests (simultaneous versus sequential) does have an effect on the results. Obviously, the main risk of conducting sequential comparative tests (*i.e.*, manual versus automatic operation) is that raw sewage entering the plant may differ in nature from one time frame to the next. This possibility is an inherent disadvantage that, at best, can be compensated for only partially.

The Renton plant was operated for about a year (March 1970 to April 1971) under manual control while an automatic DO control system was being installed in the new aerator. The following year, the plant was successfully operating with automatic DO control. Data were collected for comparative purposes during the months of October, November and December for years 1970 and 1971. The operators and plant management had an excellent attitude toward automation. Also, the manual control policy was well defined and expertly carried out.

The obvious question, however, is whether the sewage was identical for both time frames. One partial answer is that the BOD loading to the plant increased about 50% during the automatic control period. In spite of this increase, the performance of the plant did improve. The effluent BOD decreased from a geometric mean of 11.1 ppm, obtained during manual operation, to a mean of 3.9 ppm for automatic operation. Figure 1 shows the effluent BOD data plotted on logarithmic probability paper to obtain a more normal distribution of measurements.

Further analysis indicated that the sludge characteristics may also have been affected by automatic DO control. The

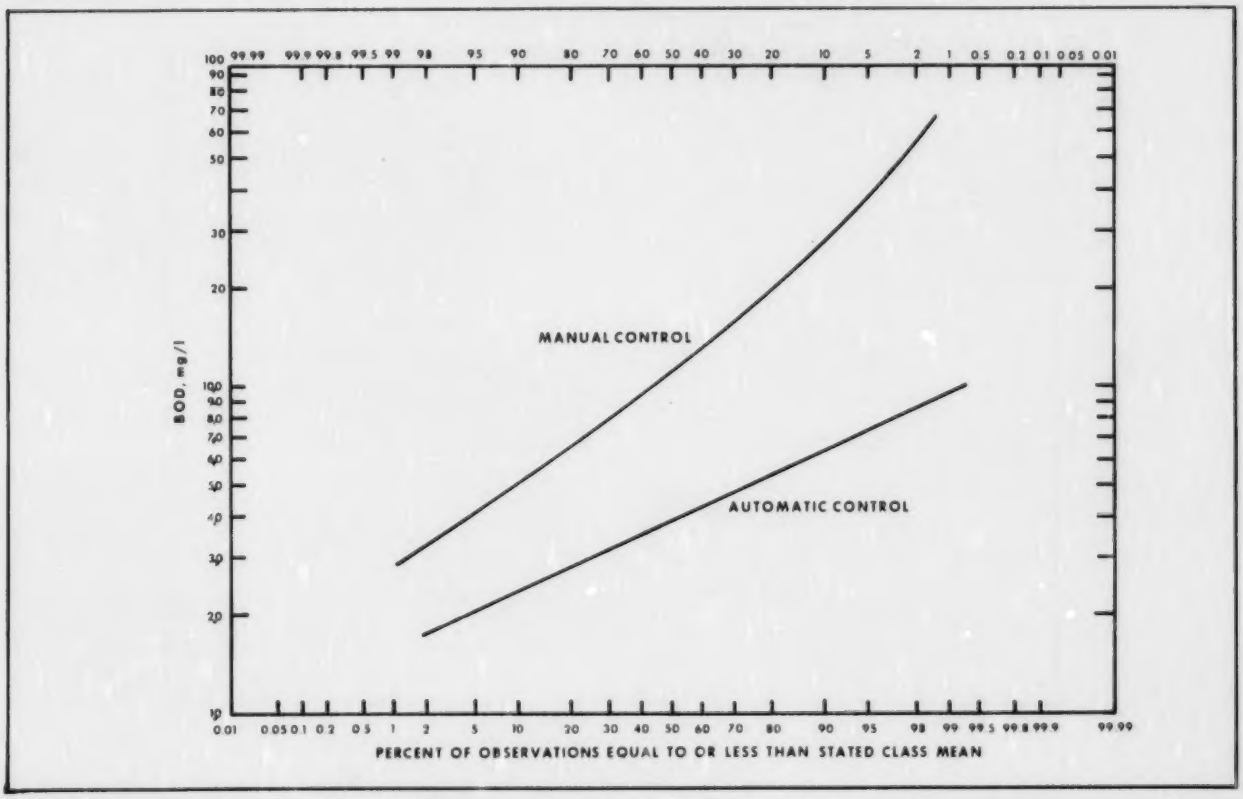

Figure 1. Frequency Distribution of BOD in the Effluent

frequency distribution of the sludge volume index (SVI) is shown in Figure 2. The arithmetic mean for the SVI with manual control was 332. This was reduced to 86 with automatic control. Since BOD is a broad analytical term and since this was a sequential comparative test, the data are promising but inconclusive. This study, therefore, requires confirmation with further research. The U. S. EPA Pilot Plant at Blue Plains has already begun such research, as indicated previously.

At the Palo Alto Sewage Treatment Plant, four control strategies were evaluated and compared to manual operation. The control schemes were DO, air/return sludge (DO/RAS), respirometry, and mixed liquor suspended solids (MLSS). Each control strategy was evaluated for about 30 days. There were three well-defined manual operations to accommodate the operating requirements associated with wet- and dry-weather flows.

As compared to manual operation, DO control showed a 13% performance improvement in terms of TOC measurements and an 11% reduction in air use. For MLSS control, the solids level in the aerators were maintained close to set point, although a low limit on RAS pumping resulted in uncontrolled increases in MLSS during periods of low plant flow.

During the evaluation of the MLSS control scheme, proper sludge management became necessary. A separate aeration basin was converted to a sludge storage tank to accommodate high loadings to the plant. Perhaps because an aerator basin was being used for sludge storage, or perhaps because of sludge age, a scum appeared in the final clarifier. This scum would not settle and, as a result, caused a poor quality effluent. When sludge storage was eliminated, the scum disappeared and the effluent quality improved.

One technique for complete control of the aeration basin consists of regulation of food-to-microorganism ratio (F/M). The technique for measuring the food differs: It may be accomplished by measuring TOC, COD, or oxygen uptake. Two different types of suspended solids meters were used to indicate the microorganism concentration. The readings of both meters correlated well with each other and with laboratory suspended solids values.

Suitable automatic TOC and COD analyzers were not available for on-line control during the Palo Alto experiments. Therefore, only two F/M control strategies were evaluated. These were feedback respirometry control and DO/RAS control. For DO/RAS control, the air flow was used to infer food, and then the return sludge was adjusted accordingly. In other words, the entire aeration tank was used as a respirometer to set the return sludge flow. The results of these experiments were inconclusive, probably for three reasons: (1) more time was needed for collecting data than was allotted,

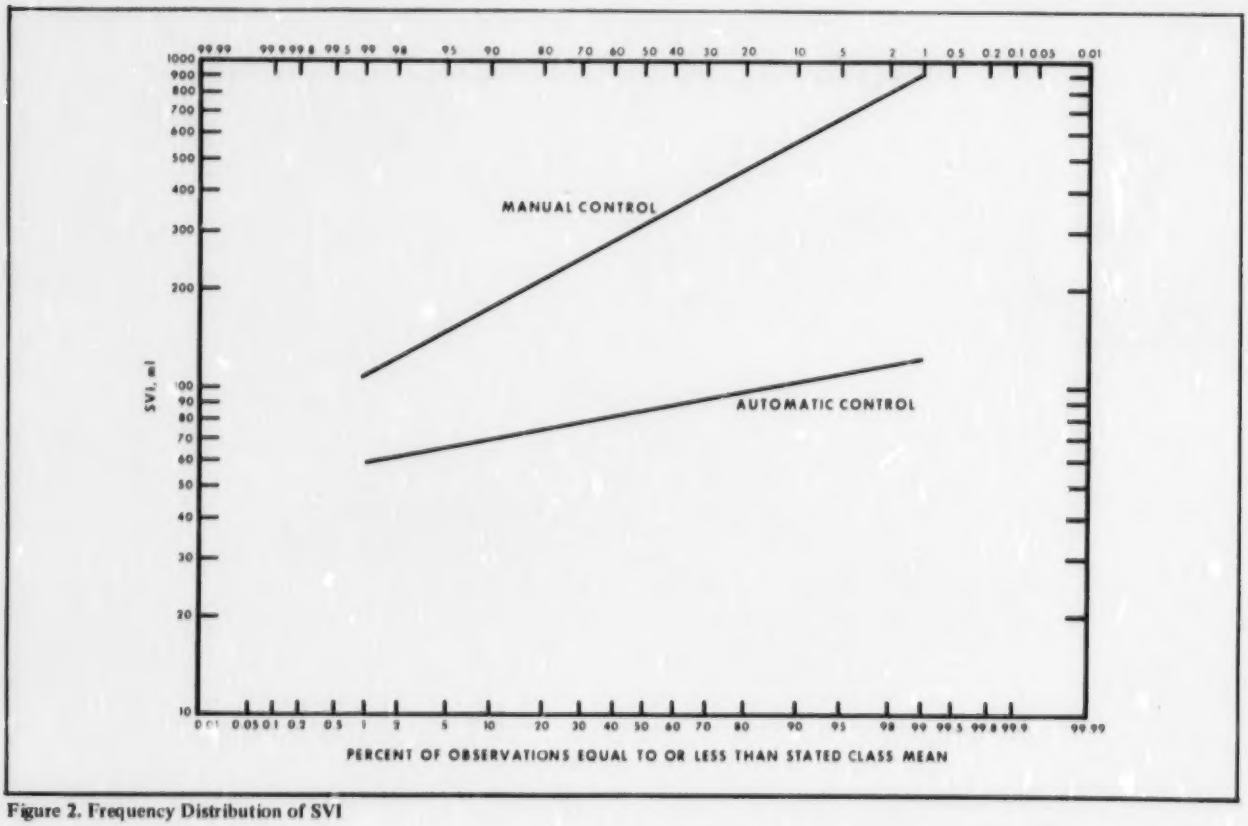

Figure 2. Frequency Distribution of SVI

Table 1. Costs for Various Control Schemes for Alum Addition at a 10-mgd Plant (August 1971)

Control scheme	lbs Alum per day	Capital cost $	Cost of alum c/K gal	Total cost of plant, c/K gal	Annual cost Thousands/ year
Mass-proportional	16,290	$112,000	1.66	2.22	81
Flow-proportional	26,850	128,000	2.74	3.33	121
Operator control	28,260	134,000	2.88	3.48	127
No control	35,700	145,000	3.64	4.27	156

(2) difficulties were encountered in separate sludge storage and in the ability to supply the proper amounts of RAS at low flows, and (3) assurance was lacking that the manual tests could be accurately correlated with their adjacent automatic tests.

COMPUTER SIMULATIONS

An alternative to field evaluation is computer simulation. But for effective studies, such simulations must use mathematical models that consider the entire system and have been demonstrated to be accurate by field evaluations. Most mathematical models emphasize treatment of liquid waste; as a result, there is little work on determination of sludge quality, separation, and subsequent handling. There is evidence that DO control does affect sludge characteristics, but the mathematical models that exist today do not simulate this. Consequently, accurate cost and performance data must be obtained from field evaluations.

COST-EFFECTIVE ANALYSIS AND PERFORMANCE IMPROVEMENTS

The relationship of cost to performance is sometimes overlooked in evaluations. To obtain an accurate cost-effective analysis, all data must be normalized. The cost of improving the performance of a plant removing about 90% BOD has been shown (4) to follow an exponential function. Manually operated plants typically remove 85 to 90% BOD; if automation were to improve this performance, then such improvements must be considered in computing cost savings to avoid significant errors in cost-effective determinations.

However, there are certain processes in which the performance appears to be negligible for cost-effective analyses. Such processes are normally dependent on a chemical addition in which a minimum amount of chemical achieves the performance desired. Further addition of a chemical is simply wasted. An example of such a process is alum addition for phosphorus removal.

Costs for alum addition at a 10-mgd plant for various control schemes were calculated by Convery *et al.* (5) and are shown in Table 1.

Periodic operator control provided a saving of $29,000 per year. This saving could be increased by more frequent operator attention. Similarly, if flow-proportional control were employed, an additional saving of $5,500 per year would result. Feedforward mass-proportional control provided an annual savings of $40,500 compared to flow-proportional control alone. This amount does not include the significant savings in sludge-handling costs that would also accrue, yet it is more than adequate to justify the purchase of a phosphate analyzer. Similar cost comparisons have been made for methanol addition for denitrification (6) and for breakpoint chlorination (7).

ENERGY REQUIREMENTS

The final parameter in evaluating automation is energy utilization. The Palo Alto study showed that simple DO control can provide a power saving of 11% and consequently an economic savings of $5,500 per year. Since air blowers are one of the largest energy consumers within a treatment plant, this energy saving is very significant.

If the entire U. S. population were served by activated sludge treatment plants, it has been estimated that the average power consumption would be 0.113 kwh per capita per day; yet the energy available in sludge (8) is 0.154 kwh per capita per day. We must begin investigating the possibility of automating sludge-handling so as to achieve cheaper energy for plant operation. Data obtained from the U. S. EPA's contract with Raytheon Company indicate that instrumentation and control schemes for automated sludge processes (those for pH, temperature, and methane production, for example) have a pay-back period of 0.94 years for a 10-mgd plant, and 0.65 years for a 100-mgd plant. This is only a beginning.

The problem is serious. Consider, for example, the Minneapolis-St. Paul Metropolitan Sewerage District, which has received an ultimatum from the local utility; this utility threatens to deny the District any natural gas by 1978. In the intervening years, the District's gas supply will be progressively cut back. The District is now seriously looking at all forms of sludge-handling to optimize energy production and reduce energy use. With the energy crisis that we face today, there are

no assurances that other plants will not eventually suffer the same fate. Automation could play a vital role in this area.

PRESENT NEEDS

In spite of the work that has been done in automation at the National Environmental Research Center, there are still many research needs that must be answered. For example, we still need accurate mathematical models, especially models describing sludge characteristics and the performance of sludge-handling and removal processes. New or improved models for sludge handling, removal, and disposal should ease the task of formulating and evaluating the corresponding control strategies for such sludge processes.

The mechanics of implementing automatic control are reasonably well established, and the Renton, Washington study demonstrated the benefits of DO control. This technology must be documented and promulgated to encourage future plants to install automatic DO control and to encourage current plants to upgrade their operation by adding DO control. Meanwhile, research should be conducted to investigate the effects of DO setpoint on effluent quality, sludge-handling characteristics, optimum DO setpoint, proper location, and immersion depth for the DO probe, etc.

We must utilize instruments and automation for energy conservation and generation. At the Raymond Clayton Plant in Atlanta there is a methane monitor for manual control of a digester. The feasibility of automating a control loop to utilize such a monitor for better and more reliable production of methane should also be investigated because sludge digesters that function properly are a valuable energy source. We must develop monitors and alarms that alert the operator to toxic substances entering either the plant or the anaerobic digester. Alternative modes of treatment must also be considered in the event that toxic materials still manage to enter the plant in spite of any precautionary measures taken to prevent this from occurring.

Further energy savings can be made by instrumenting the dewatering of sludge before incineration. Instrumentation to measure sludge characteristics is essential to developing an automatic control loop for polymer addition before vacuum filtration or centrifugation.

Finally, we must help engineering firms and small municipalities by offering typical instrumentation specifications that plant designers can readily incorporate in their process designs and for which the city planners could easily solicit bids.

Design manuals for automated control loops should be published to enhance the state-of-art and encourage implementation.

The U. S. EPA is doing work in all these areas, but our resources are meager in comparison to the job that we know must be done. It is our hope that this workshop will provide the correct priorities, generate new ideas, and serve as a vehicle of communication.

REFERENCES

1. Roethlisberger, F. J., and Dickson, W. J., "Management and the Worker," Harvard University Press, Cambridge, MA (1939).
2. Roesler, J. F., "Plant Performance Using Dissolved Oxygen Control," *Jour. Environ. Eng. Div., 100*, 1069 (1974).
3. Petersack, J. F. and Smith, R. G., "Full-Scale Demonstration of Advanced Automatic Control Strategies for the Activated Sludge Process," Final Report submitted to the U. S. Environmental Protection Agency, July 1974.
4. Smith, R., "Wastewater Treatment Plant Control," Presented at the Joint Automatic Control Conference, Washington University, St. Louis, MO (1971).
5. Convery, J. J., Roesler, J. F. and Wise, R. H., "Automation and Control of Physical-Chemical Treatment for Municipal Wastewater," *Proc. Conf. Applications of New Concepts of Physical-Chemical Wastewater Treatment*, Vanderbilt University (1972).
6. Roesler, J. F., "Factors to Consider in the Selection of a Control Strategy," *Proc. Second U. S.-Japan Conference on Sewage Treatment Technology*, Cincinnati, OH and Washington, DC (1972).
7. Roesler, J. F., Internal Memorandum, November 1971.
8. Anon., "Shortages: Water Pollution Control Facilities Face the Crisis," *Jour. Water Poll. Control Fed., 46*, 621 (1974).

FIELD EVALUATION OF THE EFFECTIVENESS OF AUTOMATION

Allen E. Molvar

Environmental R&D Director, Raytheon Company, Portsmouth, RI 02871

INTRODUCTION

From successful experiences with instruments and automatic control devices, the automation of both wet- and dry-weather wastewater treatment plants offers these well-known and widely published potential advantages:

Improved process performance
Reduced energy consumption
Reduced chemical consumption
Reduced sludge production
Reduced equipment size
Reduced operating labor
Reduced maintenance requirements
Increased equipment life.

Most of the available literature, however, fails to point out the potential costs and maintenance requirements that are characteristic of the proposed instrumentation. Instrument loops usually include measuring or sensing elements, signal

transmitting devices, display elements, controllers, and final control elements. Accordingly, this equipment must be purchased, installed, checked out, and properly maintained. Although some on-line instrumentation may be essential for process operation or mandated by regulatory agencies, most on-line instruments and all automatic control devices used in wastewater treatment projects are optional; they are installed to effect savings. In order to select intelligently the instrumentation and automatic control devices that should be installed, a single touchstone must be met: the potential benefits must offset the added costs and maintenance burdens. Figure 1 displays pictorially the factors involved in a cost-benefit analysis that is used as a decision-making aid.

To assess the effectiveness of currently available instruments and automatic control devices under field conditions and to accumulate the baseline information necessary for pragmatic cost-benefit analyses, the United States Environmental Protection Agency sponsored a comprehensive study of the state-of-the-art. These analyses were intended to determine the type and degree of automation that are best used in wastewater treatment facilities. As part of this project, a team of engineers surveyed 50 selected municipal and industrial wastewater treatment facilities, located throughout the United States (as shown in Tables 1 and 2). These plants practiced a wide array of processes. Although the majority of those surveyed were dry-weather or combined-treatment facilities, some storm-water treatment plants and control centers were also examined.

TABLE 1. TYPES OF FACILITIES SURVEYED

Type of Facility	Number Visited
Primary treatment plants	9
Secondary treatment plants	25
AWT treatment plants	3
Storm-water detention facilities	3
Computer data centers	5
Industrial waste treatment	2
Pilot plants	3

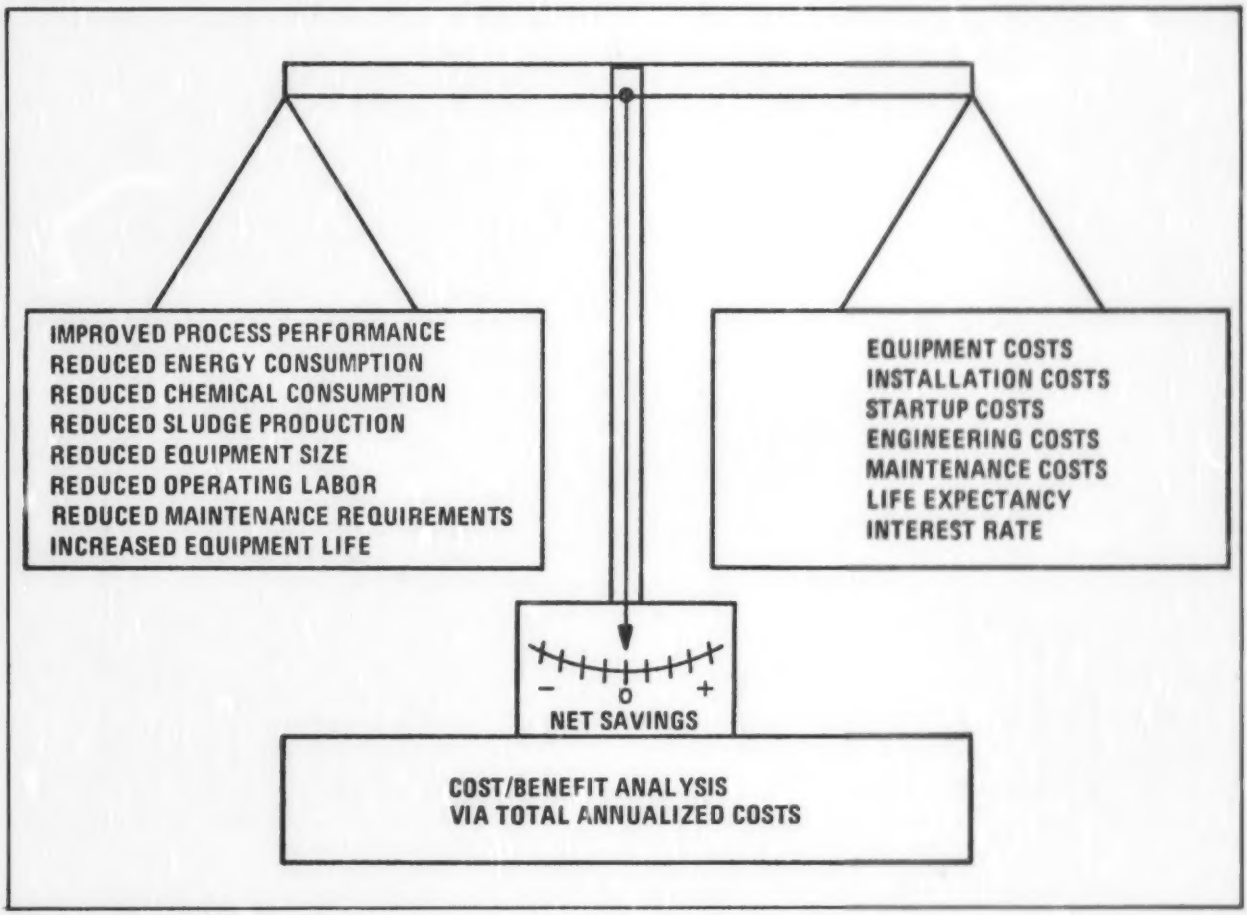

Figure 1. Cost/Benefit Analysis

TABLE 2.
REGIONAL LOCATIONS OF PLANTS SURVEYED

EPA Region	Number Visited
1	2
2	4
3	4
4	5
5	16
6	2
8	1
9	10
10	6

METHODS

Prior to the on-site inspections, the survey engineers attended a 2-day orientation session during which the type of measuring and sensing devices that might be encountered, as well as the standardization of all survey reports, questionnaires, and drawings, was discussed. Extensive questionnaires (Figures 2, 3, and 4), which detailed pertinent background information, instrument performance and cost, and control loop experiences, were prepared in advance.

At the start of each facility visit, the survey engineer met with plant management and those persons responsible for instrumentation. Plant histories, design flow rates, and operational characteristics were discussed at these meetings, with special emphasis placed on the overall benefits or liabilities of the installed instrumentation. This information was then documented on the General Survey Questionnaire (Figure 2). A plant tour (with the facility's instrument engineer usually functioning as guide) permitted the survey engineer to examine the operating instruments and control loops item-by-item. During this tour, measuring devices were inspected, and pertinent data (including the manufacturer, model number, maintenance characteristics, accuracy, and application) were recorded on the Instrument Survey Form (Figure 3). More-

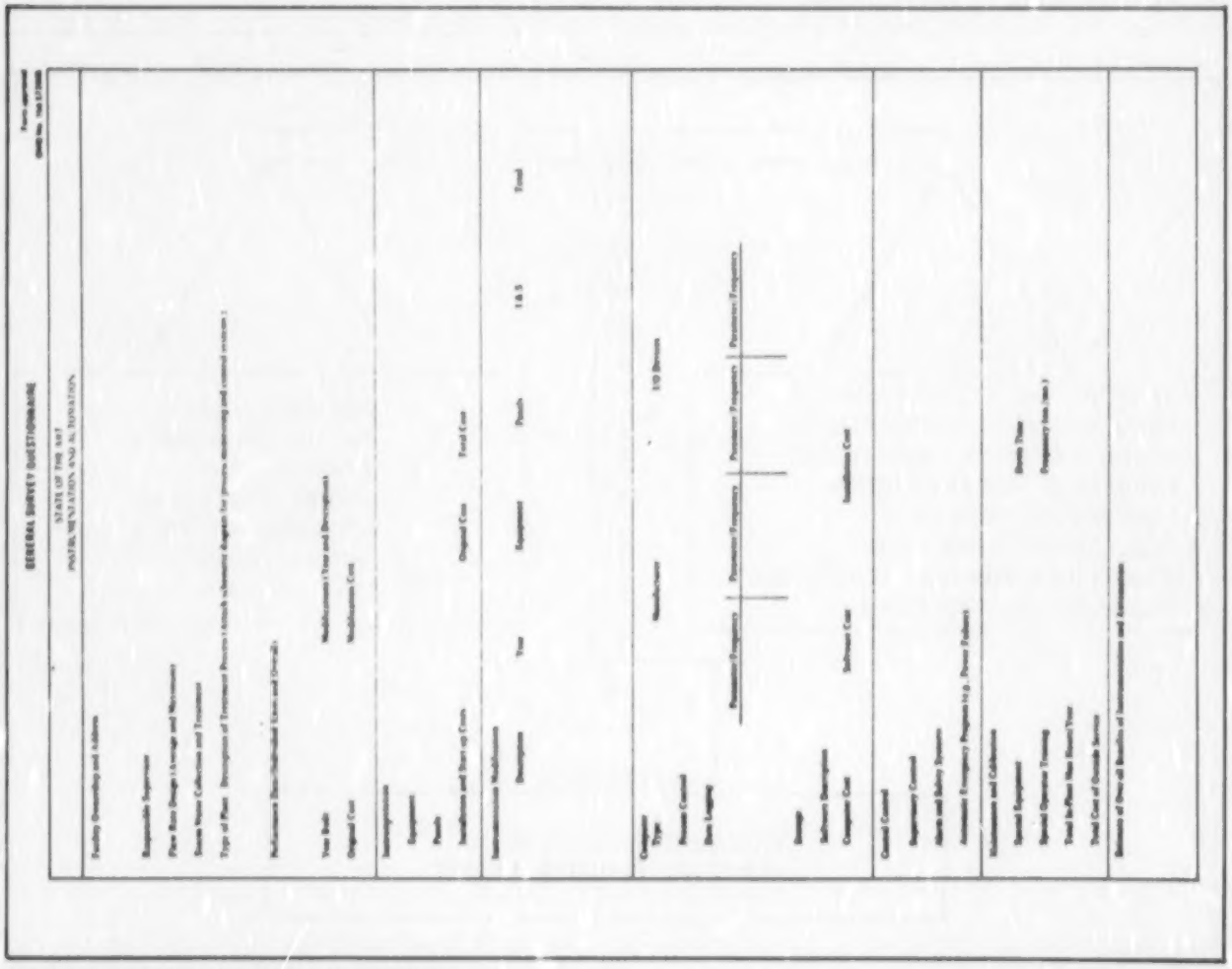

Figure 2. General Survey Questionnaire (Sample Form)

INSTRUMENT SURVEY FORM

Instrument				Operating Experience										Peripheral Equipment		Comments
Parameter	Manufacturer	Model Number	Equipment Cost	In-Plant Maintenance (mh/yr)	Maintenance Frequency (no./mo.)	Special Training	Service by Contract ($ or mh/yr)	On-Demand Service ($ or mh/yr)	Frequency (no./mo.)	Total Downtime	Downtime Frequency (no./mo.)	Problems*	Accuracy	Auxiliary Devices**	Recording Devices***	

* Corrosion, fouling, etc.
** Limiters, alarms, ratio relays.
*** Local and central.

Figure 3. Instrument Survey Form (Sample Form)

LOOP AND PROCESS CONTROL SURVEY FORM

Control Techniques									Benefits					Operating Experience								Comments
									Annual Cost Savings			Process Improvement										
Code Number (Schematic Diagram)	Process Being Controlled	Number of Loops	Control Mode*	Type of Controller**	Actuating Power	Final Control Element***	Estimated Response Time (min.)	Manpower (mh/yr)	Utility (kW-hr/yr)	Chemical (lbs/yr)	Increase Removal (%)	Parameter Variance min/max (mg/l)	Maintenance & Calibration by In-Plant Personnel ($ or mh/yr)	Maintenance Frequency (no./mo.)	Special Training	Service by Contract ($ or mh/yr)	On-Demand Service * ($ or mh/yr)	Downtime (hrs/yr)	Downtime Frequency (no./mo.)		

* Control mode: relay, proportional, proportional plus reset, etc.
** Types of controllers: analog (pneu., hyd. or elec. media); computer (supervisory, direct digital or set analog).
*** Final control element: pneu. valves, variable speed pumps, etc.

Figure 4. Loop and Process Control Survey Form (Sample Form)

over, the survey engineer examined the control techniques, costs, benefits derived, and operating experiences. His observations were recorded on the Loop and Process Control Survey Form (Figure 4). In order to coordinate the accumulated information with respect to in-plant applications, applicable instrument diagrams were constructed using standard ISA symbols.

RESULTS AND CONCLUSIONS

Measuring Devices

Unreliable sensors accounted for most of the difficulties experienced with automatic measurement and control in wastewater projects. The accumulated instrument operating experiences, summarized in Table 3, clearly show that wastewater instruments require more maintenance than their industrial counterparts. Since most measuring devices in wastewater service interface directly with raw sewage, mixed liquors, or thickened sludge, these devices are subject to continued fouling from solids deposition, slime buildup, and precipitation. Accordingly, they need more frequent cleaning and calibration. Poor mechanical reliability, interferences, and a lack of established measuring principles are also responsible for the unsatisfactory state of some analytical sensors.

The distribution of measuring devices (Figure 5) indicates that flow and level devices account for nearly half the instrumentation employed in treatment facilities. Analytical instruments represent approximately a quarter of the instruments observed, and position, speed, weight, and other mechanical-type measurements add up to about 15%.

The following measuring instruments possess sufficient reliability for on-line use in wastewater treatment facilities and are commercially available: **level, flow rate, temperature, pressure, speed, weight, position, conductivity, rainfall, turbid-**

VARIABLE	INSTRUMENT	APPLICATION	TYPICAL COST	TYPICAL MAINTENANCE FRQ/YR.	MH/YR. STP	MH/YR. IND	SKILL	RELIAB. (MTBF)	TYPICAL USE
LEVEL	Bubbler	Tanks & Wet Wells	$200	12	8	4	1	1-2 yrs.	5-15 yrs.
	d/p Trans.	Digesters & Sludge	700	0.6	5	5	3	1-5 yrs.	5-15 yrs.
	Float & Cable	Tanks & Wet Wells	400	24	60	5	1	.2-2 yrs.	2-20 yrs.
	Optical	Sludge Blanket	1K	—	—	—	2	.1-5 yrs.	2-8 yrs.
FLOW	Flume & Weir	Major Flows	2K+	1.4	2	—	3	.5-5 yrs.	5-30 yrs.
	Venturi, etc.	Air and liquids	800+	4	20	6**	3	2 mo.-5 yrs.	5-30 yrs.
	Propellers	Clean liquids	1K+	7	10	10	4	1 mo.-1 yr.	1-8 yrs.
	Pos. Displace.	Gases	500+	2*	80*	10	4	1 mo.-1 yr.	1-5 yrs.
	Magnetic	Liq. and Sludge	2K+	12	12	8	4	.5-10 yrs.	5-20 yrs.
DENSITY	Nuclear	Med. & Thick Sludge	5K	48	51	40	(3)	1-3 yrs.	8 yrs.
	Mechanical	Med. & Thick Sludge	—	Excessive			3	1-6 mos.	2 yrs.
ANALYSIS	pH and ORP	Aqueous Liquids	2K	300	50	29	4	1-4 mos.	.5-5 yrs.
	Dissolved O_2	Aqueous Liquids	2K	100	60	—	4	1-9 mos.	.1-5 yrs.
	Res. Chlor.	Aqueous Liquids	5K	365	140	—	4	.2-1 yr.	4 yrs.
	Turbidity	Fairly Clean Liquid	3K	—	—	—	4	1-6 mos.	4 yrs.
	Conduct.	Aqueous Liquids	1K	200	60	—	3	1-4 mos.	4 yrs.
	Chlorine Gas	Airspace	3K	24	50*	—	4	.5-1 yr.	8 yrs.
	Explosive Gas	Airspace	3K	12	12+	50	3	.2-1 yr.	8 yrs.
	BOD, TOC, etc.	Wastewater	—	Excessive			5	.1-1 mo.	.3-1 yr.
MISC.	Temp.	All	300	1*	8*	4	3	.5-2 yrs.	5 yrs.
	Press.	All	200	5	4	4	3	.1-5 yrs.	5 yrs.
	Speed	Engines, etc.	—	—	—	—	4	.6-5 yrs.	5 yrs.
	Weight	Sludge or Cl_2	2K	24*	60*	—	4	.6-2 yrs.	10 yrs.
	Position	Sloice Gates	1K	18*	30*	—	3	.1-1 yr.	1 yr.
	Sampling	Liquid Streams	4K	0.5	20	—	2	.1-1 yr.	4 yrs.
	Rainfall	Storm Waters	500	24*	50*	—	3	1-5 yrs.	12 yrs.
CONTROL	Level	Wells & Basins					3		
	Flow	All Fluids					3	NOTE:	
	Sludge	Sludge Separation					3	STP = TREATMENT PLANT	
	Air Flow	Aeration					3		
	Dosage						3	IND = INDUSTRIAL,	
	Res. Chlorine	Chlorination					4	SEE TEXT	
	DO	Aeration							

* Estimated ** d/p Converter only

Table 3. Instrument Performance

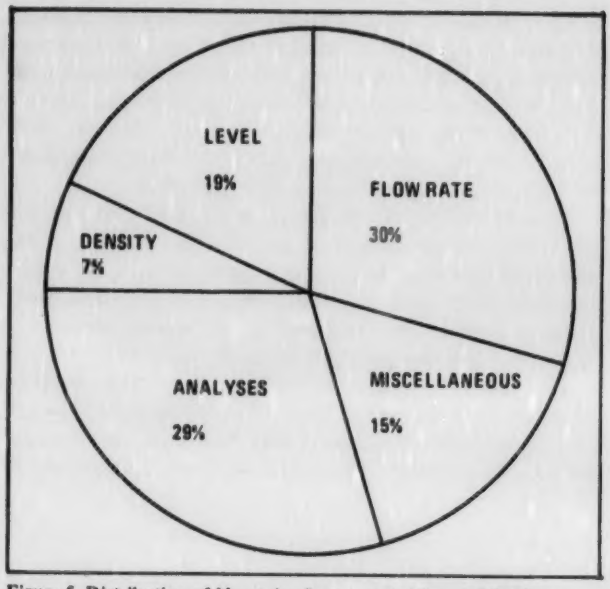

Figure 5. Distribution of Measuring Instruments Observed During User Survey

ity, pH, residual chlorine, free chlorine gas, and fire hazardous (flammable) gas. This is based on actual field experiences in the surveyed facilities (summarized in Figure 6).

Sludge density meters, sludge blanket level detectors, on-line respirometers, dissolved oxygen probes, and many automatic sampling systems use well-established principles that are suitable for wastewater monitoring and control activities but require so much maintenance that many users are dissatisfied with them. These instruments need improved maintenance characteristics before they will become widely used.

In spite of the many successful flow-measuring devices observed in the treatment plants, accurate and reliable flow rate monitoring for storm water does pose special problems. Highly transient flows, large operating ranges, high suspended solids, and frequent collisions with large debris are only some of the obstacles that an acceptable storm-water in-sewer flowmeter must overcome. Consequently, a suitable storm-water flowmeter needs to be developed that will produce the accurate flow rate data required for sewer regulation.

Automatic Control Loops

As shown in the summary of automatic control devices (Figure 7), most facilities successfully practice automatic **liquid level, liquid flow rate, and air flow rate control** since fluid regulation is important for proper operation, and satisfactory flowmeters are readily available. The flow control systems that are presently available use established designs that are entirely adequate for wastewater treatment activities.

Process control, however, is used only occasionally in wastewater treatment. The nationwide survey (summarized in Figure 7) found that **flow-ratio chemical addition, feedback residual chlorine, and digester temperature control systems** worked well and caused no difficulties. Most plant managers considered these automatic control systems cost-effective since they save both energy and chemicals, and improve plant operation. Automatic feedback dissolved oxygen control systems effectively reduced oxygenation power consumption, but some users complained that these systems require considerable probe maintenance. The turbidity and pH control systems observed during this survey were inadequate and gave unsatisfactory performance because of faulty system design and installation. Some of the process control parameters (such as substrate concentration, MLVSS, and food/microorganism ratios) that may be the most potentially useful have not been successfully monitored and controlled in wastewater treatment plants.

Although a collection of detailed capital costs, operating improvements, and maintenance data was one of the prime objectives, fewer than 30% of the surveyed plants had this information. In all cases, the necessity and cost savings for automatic flow rate, liquid level, and temperature control systems were readily apparent. The cost benefits of automatic residual chlorine, dissolved oxygen, chemical addition via flow pacing, and pH, were somewhat more difficult to assess because of the lack of data. Based on the survey team's judgement and experiences, the range of potential cost benefits was estimated for these automatic control systems. Table 4 highlights the control strategies, confidence, advantages, limitations, and recommendations. Most plant superintendents reported that any operating labor savings due to automatic control were offset by the added maintenance burdens. Accordingly, most automatic process control systems should be evaluated on their chemical and utility savings capabilities.

Central Control

Central control organizes the plant operation so that all important events, alarms, and treatment information are displayed, indicated, and recorded in a centralized location (usually referred to as the Control Room). In addition, most central facilities practice automatic or remote manual actuation of final control elements. The success of central control is ensured by the commercial availability of reliable transmitters, displays, and indicating and recording equipment. Virtually all the facilities surveyed successfully utilized a high degree of centralized control. Since centralized control reduces the number of men required to operate a large treatment plant, it is one of the few forms of instrumentation that are readily justifiable on a labor savings basis.

Computers

Modern data-logging systems accumulate, format, record, and display large quantities of data effectively; consequently, most new plants have automatic data acquisition systems. Approximately 20% of the visited facilities used data-logging computers, and 90% of these users were satisfied with their automatic data acquisition systems.

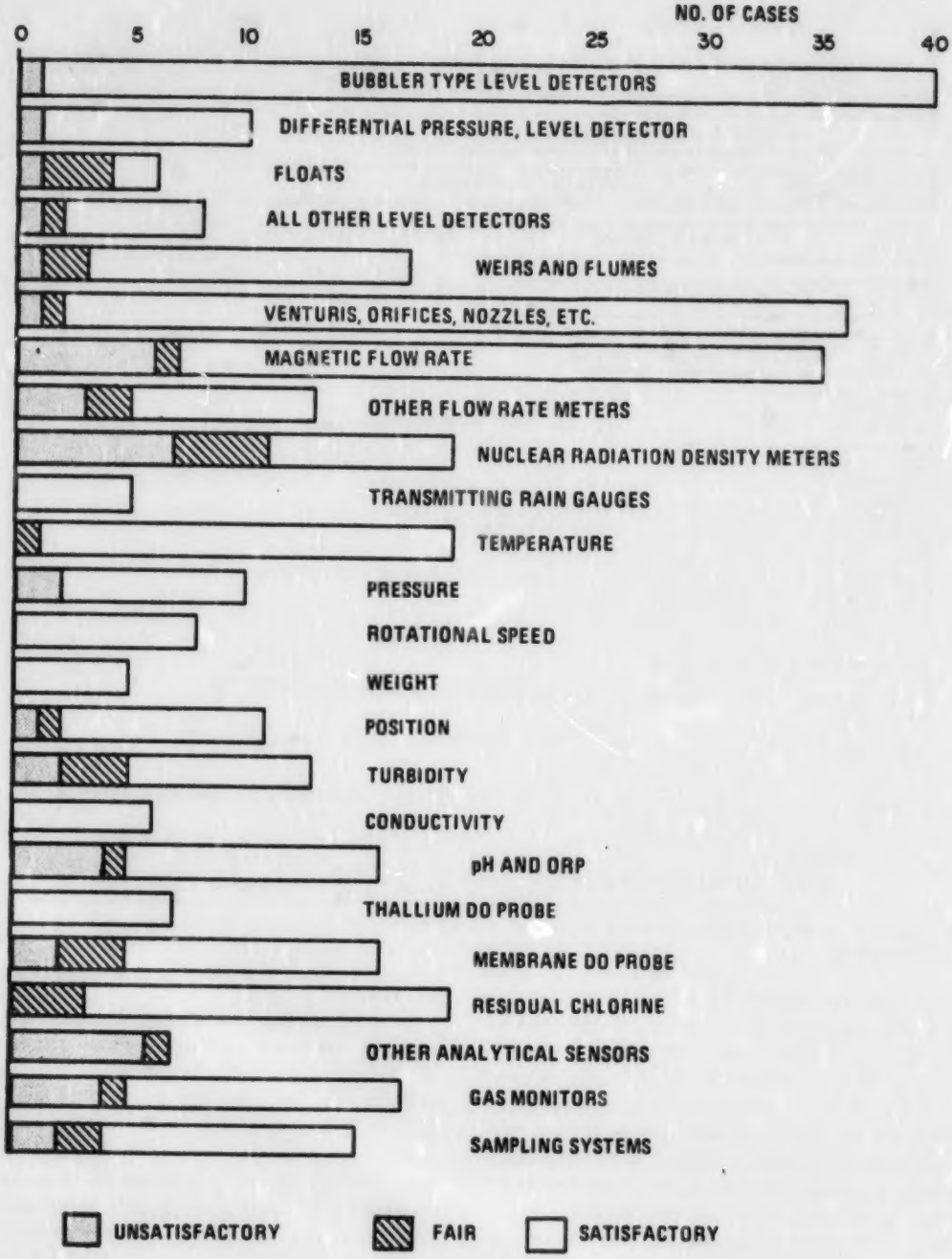

Figure 6. Performance Summary for Measuring Devices in Wastewater Treatment Service

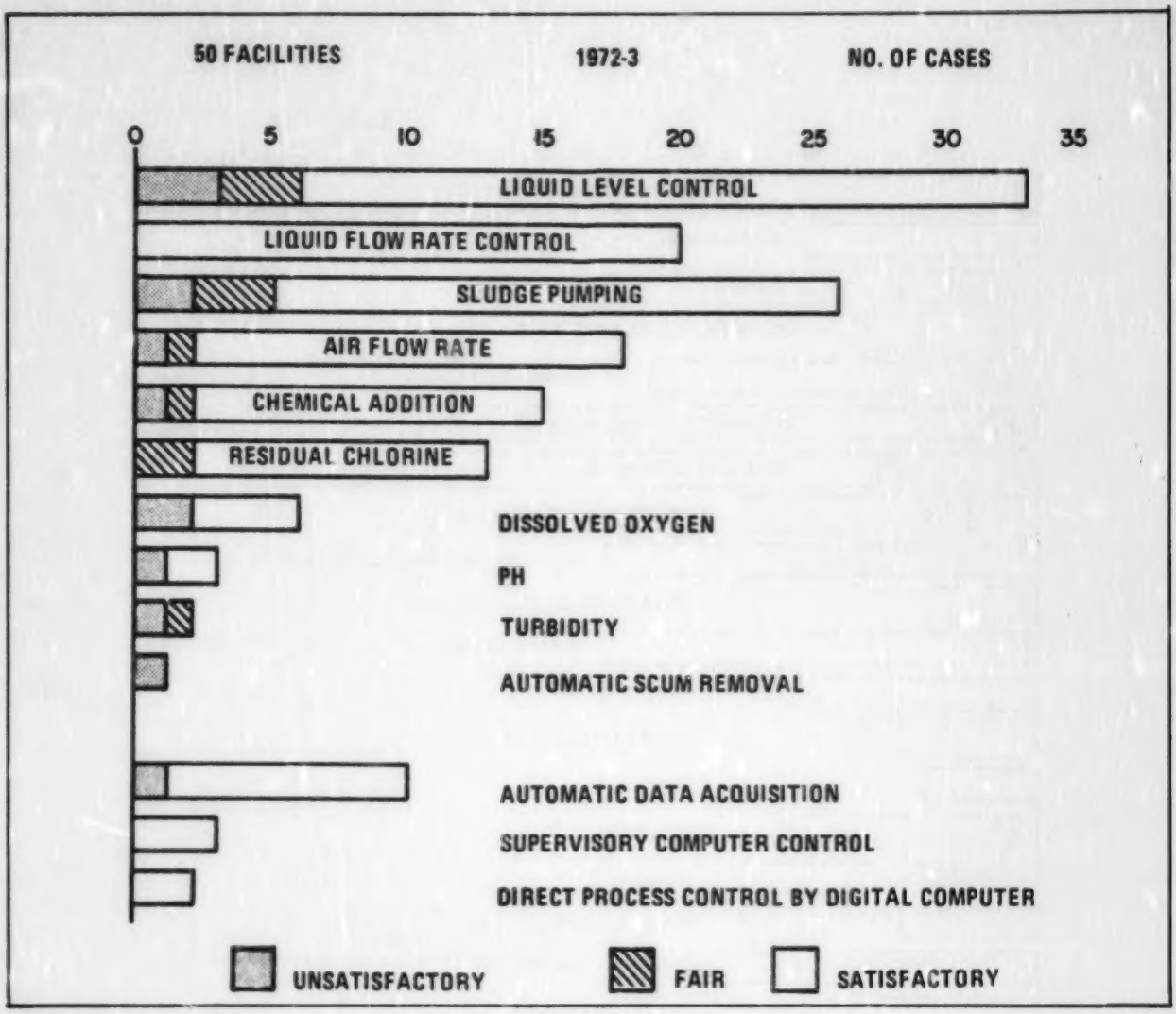

Figure 7. Performance Summary for Automatic Control Loops in Wastewater Treatment Service

Although process and supervisory control computers have demonstrated their merits in many industries, they are not well established in dry-weather treatment plants. Only two of the surveyed facilities had process control computers, whereas three storm-water control centers used computerized supervisory control. All of these computer systems worked well. Computerization of dry-weather facilities is still in its infancy, and not enough operating experience has been accumulated to assess its desirability in wastewater treatment projects.

Computerized supervisory control of large storm and combined sewer systems is cost-effective because the vast number of variables and control points exceeds human computational and decision-making ability within corrective time limits.

Maintenance

In spite of the low instrument usage rates, wastewater treatment personnel exhibited a good attitude toward instrumentation, as measured by their willingness to use and maintain the installed instruments. The survey team found that the treatment plants supplied approximately 90% of the maintenance resources needed. Small abandonment rates also attest to the favorable attitude of wastewater treatment personnel. Individual plant managers' disposition toward instrumentation, however, ranged from poor to excellent.

As a group, satellite storm-water treatment facilities supplied less than adequate maintenance. Possibly because of its newness, storm-water instrument maintenance is not well understood. Since none of the satellite facilities started up or

Table 4. Automatic Control Benefits

Description	Potential Savings	Confidence	Basis	Advantages	Limitation	Recommendations
Feedback compound residual chlorine control	25 to 50% savings in Cl_2	High	Field observations and engineering judgement	Produces good residual chlorine control; responds rapidly to flow changes; highly stable	Residual chlorine analyzer requires considerable maintenance	Suitable for most medium and larger sized plants
Feedback dissolved oxygen control	10 to 40% savings in aeration power consumption	Moderate	Field observations	Energy-effective control system; responds to actual oxygen demand	DO probes require a moderate amount of maintenance; may be difficult to apply to some plug flow systems	Suitable for most plants, especially completely mixed aeration systems
pH	Essential for pH adjustment processes	Fair	—	Keeps pH with a reasonable range of desired point	pH probes tend to foul in wastewater service	Advisable to use ultrasonic cleaning
Chemical addition via flow pacing	15 to 30% chemical savings	High	Engineering judgement	Simple, reliable, cost-effective control system; responds to flow rate variations; stable control strategy	Does not respond to strength variations	Suitable for service wherever demand per unit volume remains constant
Settled sludge removal from clarifiers based on feedback density measurements	20 to 50% reduction of sludge volume pumped	Fair	Engineering judgement	Produces a dense sludge with minimum amount of water	Density analyzers require frequent repair and maintenance	Useful in large plants where downstream sludge processes are sensitive to water content

shut down automatically, it would behoove individuals concerned with storm-water treatment facilities to direct more attention to instruments and automatic devices and to their maintenance. On the other hand, storm-water control centers, which typically receive storm-water and combined sewer network information, were well maintained and operated satisfactorily.

Although most plants have reasonably well-qualified instrument maintenance staffs, any plans that call for the addition of sophisticated instruments and automatic control devices must provide for upgrading the staff's qualifications.

Instrument Budgets

The nationwide survey of 50 wastewater facilities found that most of the treatment plants used fewer instruments and automatic control devices than the closely related water supply and chemical processing plants. The amassed cost data shows that the average secondary wastewater treatment plant spends about 3% of its construction costs for installed instruments, whereas water supply and chemical processing plants allocate about 6% and 8% respectively, for installed instruments. Remote satellite wet-weather treatment plants, which in theory should operate unattended or with just a minimal amount of operating manpower, budgeted only about 2% for instrumentation and automation.

In all fairness, it must be pointed out that the larger instrument budgets of the chemical and water supply industries are due principally to the higher usage rates of physical-type measurement and control systems (that is, temperature, level, pressure, and flow). Most of the analytical sensors that the wastewater treatment field needs must detect trace amounts of a specific substance from a multi-substance mixture. These analyzers are challenged by a difficult assignment and should be viewed in some respects as being similar to the early stages of the on-line gas chromatographs, which took 10 years and hundreds of thousands of dollars to develop.

RECOMMENDATIONS

In summary, the field survey team assessed the instrument utilization rates and performances, and estimated the special manpower skills, training, and equipment necessary to operate and maintain instruments and automatic control devices in wastewater treatment service. Wherever available, the total control system costs, as well as the economic and performance benefits obtained, were also noted. With this information a cost-benefit analysis can be performed to decide whether or not to use a particular instrumentation or control system. Moreover, the commercially available on-line analyzers and automatic control devices were classified, on the basis of the field experiences, as being: 1) unacceptable, 2) fair, and 3) satisfactory.

The small number of automatic loops observed in the plant survey attests to the low level of automation that is characteristic of most wastewater treatment plants. The survey's observations indicate that a lack of sufficiently reliable analytical sensors for automatic control has impeded process control efforts. Other commercially available process control components (such as transmitters, display devices, controllers, and final control elements) have proved their ability to provide reliable service in wastewater treatment plants. To help assess an automatic control loop's desirability, a uniform and easily practiced record keeping system is badly needed. Also, much misunderstanding and confusion can be avoided in the future by using standard instrument symbols and drawings.

An intensive application of elaborate and novel logic schemes, computers, displays, and recorders will **not** improve wastewater treatment effectiveness. Instead, well-documented field evaluation programs are needed to help ferret out desirable control systems from the numerous potentially viable ones.

DISCUSSION

Robert A. Ryder:

DO control has been utilized at the Reno WWTP since 1966, and at the present time is set to maintain DO = 0.5 mg/l at the end of the aeration tanks. This has been found to be highly effective in maintaining a low SVI, preventing bulking, and producing a good effluent. There is implicit indication that this is due to ORP suppression of the sludge, inhibiting certain strict-aerobic filamentous organisms.

Recent experience with a pilot plant of Phostrip with 10-14 hours of quiescent sludge settling, further indicates great stability of the sludge, low SVI's and excellent BOD removal.

Scum has been noted at many activated sludge plants, and seems to be a function of very long sludge age or SRT. More research is needed on this problem.

N. J. Biscan:

Mr. Roesler mentioned the need for monitors and alarms which alert the operator to toxic substances entering the treatment facility. I'd like to point out that we at Dow have developed such an instrument under EPA Grant No. S800 766, "Optimizing a Petrochemical Waste Bio-oxidation System Through Automation."

The instrument operates on a one-hour time cycle and is based on a measure of the oxygen consumed in the oxidation of the organic substrate in the samples added. Briefly, the instrument operates by first determining the area under an oxygen-uptake curve of a sample of standard biodegradable substrate, then a feed sample, and finally the standard sample again. The ratio of the standard areas gives the indication of toxicity. Questions that remain to be answered, however, are the following:

1. Is there in fact a significant problem with toxicity in feeds to municipal activated sludge plants, and what is the potential demand for a toxicity indicator?
2. How can instrument companies market an instrument, which was developed under an EPA grant, without the company obtaining patents or licensing rights?

Edmond P. Lomasney:

I should like to comment on the subject of utilizing gaseous products that are generated in the anaerobic process.

Recently completed research has indicated that the dynamics of the anaerobic process in sewage treatment have been incorrectly interpreted. The basic concepts of the behavior of the bacteria involved indicates that those bacteria which participate also manufacture combustible gases. These gases, methane and hydrogen, are products generated in this process, and the efficiency of the process is indirectly related to the ratios of these gases (excess hydrogen acting as an inhibitor to the performance of the methanogenic bacteria). As a consequence, a gaseous monitoring procedure for detecting and measuring these gases is a necessity for the continuous efficient and effective performance of the anaerobic process.

Ronald N. Doty:

Much work has been done to evaluate available instruments and to determine what is needed. However, we seem to be experiencing a dichotomy which will negate much of the R & D and evaluation work which has, and is continuing to be done: the construction grants division of EPA, and the States, force us to write open specifications, thus precluding us from specifying that equipment which has been proven superior.

L. A. Schafer:

Although setting standards for wastewater instrumentation can be restrictive, some standards (similar, for instance, to fire or electrical regulations) could well be applied, subject to the following rules:

1. The standard-setting body should include both theoretical and practical people.
2. Standards should be firm, but with an autonomous application assessing procedure for evaluation of results and provisions for exceptions.
3. Standards should be proposed and discussed by a cross-section of users before adoption.

Some standards which might profitably be adopted are: standard symbols, standard classification of facility plans by disciplines (Civil, Structural, Architectural, Mechanical, Electrical, Instrument (or Control) and General), a standard selection of instrument signal ranges (4–20 ma, 10–50 ma, 3–15 psi, 20–80 inches vac., etc.), a requirement that all facilities above a certain size contain a signal interface area (*i.e.* terminal strips) suitable for connection of temporary computers or data loggers, etc.

Richard R. Keppler:

In view of the large amount of discussion that has concerned itself with the proper maintenance of monitoring equipment utilized for wastewater treatment systems, my experience in the petroleum refining industry might be helpful, since a similar problem existed in this industry about 15 or 20 years ago. It was the custom at that time to utilize, for maintenance purposes, separate groups, such as the insrument department, and to have these various maintenance groups respond to requests from the operators for maintenance required. This was ineffective in that the instrument people, for example, would consider that some of the problems which resulted in breakdown of their equipment were due to poor operator performance and likewise the operators said that an upset on the equipment was a result of poor maintenance on the part of the instrument people. Therefore, there was a continuous discussion between the

maintenance people and the operating people concerning the responsibility for the proper operation of the equipment. Later, in an effort to overcome this problem, it became the industry's pattern to contract to outside organizations for maintenance of equipment in the operation of a refinery. Although possibly more expert and skilled maintenance became available by this means, it did not eliminate the fundamental problem of one man blaming another for poor operation.

In the past several years there has developed a so-called "refinery technician"—this man begins as an operator and learns additional mechanical skills, receiving an increase in pay for each additional skill that he masters. In this way the operator is also a machinist and instrument repair man, and therefore takes great interest in proper maintenance of the equipment which he is required to operate. It is my suggestion that this kind of philosophy be adopted by the municipalities operating wastewater treatment systems, in an effort to improve the level of maintenance and performance of those systems. This combined "refinery technician" has resulted in a significant improvement in efficiency of refinery operations.

J. F. Andrews:

The discusser would like to suggest that in order to obtain maximum benefit from the automation of wastewater treatment plants it will be necessary to significantly upgrade the quality of personnel in plant operations. One method of doing this would be to involve more professional engineers directly in plant operations. Unfortunately, with the exception of our large cities, the major portion of environmental engineering profession has frequently been guilty of considering plant operations as a subprofessional area not worthy of significant engineering attention.

Most environmental engineering programs in universities have considered wastewater treatment plant operations to be a low-level task which is not suited for education or research in universities. Those few universities which have become involved in plant operations have usually done so at the technician or "operator training" level by offering "short courses" or correspondence courses. These courses have provided a valuable public service; however, they may also be partially responsible for the lack of recognition of the importance of the engineer in treatment plant operations. The major portion of the material taught in these courses is at the technician and not the engineering level and would best be taught at the vocational high school or two-year technical school level. There is a strong trend in this direction at the present time and it is expected that this trend will continue.

What, then, would be the major differences between the traditional environmental engineering curriculum and a curriculum emphasizing plant operations? There would, perhaps, be as many different opinions on this point as there are environmental engineering professors; however, in the discusser's opinion the major differences would be an increased emphasis on the dynamic behavior of plants and techniques, such as the application of control systems, to improve dynamic behavior. Most current design criteria, both as taught in universities and practised in the field, are based on average inputs or, at best, maximum and minimum inputs and have not directly considered that inputs to the plant are highly variable with respect to time. These variations are the primary reason why control is needed and they must be considered in design as well as in operation. It should be noted that a course in Process Dynamics and Control is commonly found in most chemical engineering curricula and, in the discusser's opinion, we would be well advised to include a course in "Dynamics and Control of Wastewater Treatment Systems" in environmental engineering curricula.

In addition to providing educational programs for plant operations engineers, universities should also become more involved in research on plant operations. Most environmental engineering programs have concentrated on design-oriented research and have neglected operations-oriented research, perhaps because of the assumption that this is not worthy of Ph.D.-level studies with which most university research is associated. However, the discusser's experience has been that this type of research is more difficult, from both theoretical and experimental points of view, than the usual scientific or design-oriented research. The discusser has had a total of nine Ph.D. students who have conducted their research in either the dynamics or control of wastewater treatment processes. Although much is still to be learned, since the theory put forth in these Ph.D. dissertations has for the most part yet to be tested in the field, a beginning has been made toward a quantitative description of the dynamic behavior of treatment processes, and control systems for improvement of this behavior.

Report of Working Party On RESEARCH NEEDS FOR EVALUATION OF THE EFFECTIVENESS OF AUTOMATION

Walter G. Gilbert
Chief, Municipal Operations Branch,
Environmental Protection Agency, Washington, DC 20460
James A. Mueller
Associate Professor, Environmental Engineering & Science Program,
Manhattan College, Bronx, NY 10471

The success of utilizing instrumentation and automation in the operation of wastewater treatment facilities will be measured to a large degree by the capability to produce better treatment in a more effective and efficient manner. It is important to note that the discussions of this workshop recognized the fact that automation can mean many different things, from the simple and reliable instrumentation needed for the smallest plant to the complex, computer-assisted operation of our largest facilities. There will be many variations in between, depending upon the size, complexity, and many other variables of the facility involved. Measuring the effectiveness of automation, therefore, involves many different factors.

PROBLEMS

In attempts to evaluate the effectiveness of automation for wastewater treatment, problems are encountered in three broad areas as follows: (1) effluent quality improvement, (2) cost-effectiveness, and (3) human-machine interface. Specific statements and relative priorities of these problem areas are discussed more fully below.

1. Determine the extent of effluent quality improvement, lower contaminant concentrations and reduced variability attainable through the use of instrumentation and automation.

   This problem area should receive the highest priority in future automation research in keeping with the goals of the Federal Water Quality Act Amendment of 1972 (PL 92-500) for improvement of our Nation's water quality. Regardless of other constraints, if increased automation of wastewater treatment systems reduces effluent concentrations and variability, its effectiveness will have been demonstrated and future utilization insured.

   In applying automation to attain the above goals, the interaction of the collection system and treatment plant must be considered. Improvement of existing systems by increased utilization of automation with appropriate control strategies and required system modifications must be evaluated. New system development incorporating process and system theory with required automation should be encouraged.

2. Evaluate the cost-effectiveness of incorporating automation into wastewater systems which are required to meet a specified performance objective.

   Existing and future wastewater systems typically are required to meet performance specifications due to either administrative or legislative policy or local allocation based on receiving water quality objectives. To meet this specified performance objective the type and degree of automation that should be employed in a wastewater system to yield reduced system costs must be evaluated. Unless this is accomplished, a manager will rarely consider employing automation in his system if it is already meeting performance objectives with an existing degree of manual operation.

   To accurately evaluate the cost-effectiveness of increased automation, a uniform set of criteria incorporating all economical factors must be developed. Systems must also be evaluated to determine the most cost-effective location of instrumentation as well as type.

3. Evaluate the effectiveness of the human-machine interface.

   If treatment plant automation is to have the desired degree of effectiveness, interactions of the wastewater system operators, designers, and managers must be considered. Due to its importance, this problem area has the same priority as the above cost-effectiveness area. If a plant operator lacks the training or desire to effectively utilize and maintain instrumentation, the automation system will fail. If a designer does not obtain operator feedback with respect to automation effectiveness, or long-term data feedback in a readily utilizable fashion, the effectiveness of automation will not be properly evaluated and future process and automation improvements will not result. If a manager does not allocate sufficient funds nor personnel to adequately maintain and utilize the automated facilities, a significant portion of the capital outlay for the plant will be wasted and it will not meet treatment objectives.

   Therefore, to insure the effectiveness of automation, adequate operator training with data feedback to both designer and managers must be employed.

RESEARCH NEEDS

To respond to the problem areas discussed above, research needs were identified which must be satisfied if we are to be able to fully evaluate the effectiveness of automated systems for plant operations. These needs are addressed below in priority order.

1. Develop **control strategies** to utilize instrumentation and automation in achieving maximum process reliability.

   Control strategies are needed that can fully utilize the information and response capabilities derived from varying degrees of instrumentation and automation to provide the process control data necessary for good plant operation. Such strategies must utilize the short response times that would be available through such automation to react to the widely varying extremes in influent quality, so as to produce a more consistent effluent quality. The development of such strategies must also recognize the need for varying degrees of automation for different sizes and types of plants. Achieving process reliability is an inherent part of this need.

2. Investigate the full **utilization of surge capacity** or flow equalization in maximizing plant performance. Consider the use of in-line or off-line storage or control, with determination of the optimal location of such control. Determine to what extent treatment facilities can accept varying loads and produce acceptable effluent quality. Conduct field studies required for verification.

   It is essential that feasible means of control over influent quantity and quality be evaluated, along with related impacts on plant operations. Determination must be made on the degree of control needed to achieve the desired end result. Means of automating such control systems, which provide feedback to treatment process control, are needed.

3. Establish a **data collection system** with appropriate feedback mechanisms to design engineers for continued evaluation of plant performance and use in improving future plant design. The system should be assembled with adequate correlation of related data elements for ease of retrieval.

   Although this need satisfies essentially a long-range objective, it is necessary to start it now so as to fully utilize much of the historical data now being collected.

4. Develop **uniform criteria for evaluation of the cost-effectiveness** of varying degrees and types of facility automation.

   Cost-effectiveness is determined on a comparative basis between alternative systems. Uniformity of evaluation is essential to allow ease of comparison and allow for final selection of instrumentation and control systems. Inherent to this research need is the identification and quantification in economic terms of the benefits which accrue from use of instrumentation or automation in wastewater collection, treatment, and disposal systems.

5. **Identify areas of potential cost saving** in plant operations to guide priorities in developing instrumentation and control systems. Determine and investigate in detail the most cost-effective points of application of instrumentation in wastewater treatment processes.

   Such efforts are needed to provide a guide in determining the most effective course of action in developing instrumentation and automation for any given treatment facility.

6. Evaluate the **effectiveness of existing automated systems** based on operator feedback.

   The operator must be recognized as a key element of the **total** control system. Such systems must be evaluated with this in mind. Optimization of automated systems **must** consider the role of the operator in the control loop.

7. Investigate **upstream monitoring for predictive purposes** with adequate lead times for process control.

   As well as providing information for immediate reaction to influent quality variations, such monitoring would provide historical data needed to develop effective process control strategies needed to respond to such variations. Efforts should also include a determination of the types of monitoring required, including both quality and quantity parameters.

8. **Identify and evaluate available sensors and instruments** as applied in wastewater treatment processes in terms of their performance and reliability.

   This relates directly to the need for standard tests and specifications identified in earlier workshop groups.

9. Develop the research input to a **training program** to permit full utilization of instrumentation and automation.

   A good training program is essential to develop the proper operator attitude and encourage operator acceptance of automated systems. Such training must also address the technical details of maintenance and calibration needs of automation as well as the use of the control system to improve performance.

10. Develop new and **innovative treatment processes utilizing process** theory in conjunction with the capabilities of instrumentation and automation.

    This is conceived as a need to develop new treatment processes and methods based on a "no holds barred" approach. It is essentially pure research free of the constraints of "traditional" design of treatment facilities.

11. Develop **improved models** to more closely simulate physical, chemical, and biological processes using **measurable** parameters. Utilize these models for process development, process control, and research requirements.

    Satisfaction of this need will help accelerate the process of evaluating the effectiveness of alternative automation strategies.

PRIORITIES

Priorities for the research needs identified above were assigned primarily on the basis of the need for immediate,

short-term answers to certain pressing questions regarding the role of instrumentation and automation in plant operations. The framework for procedures to evaluate the effectiveness of such systems must be established now so that development work can proceed in a more logical sequence. Lower priority was assigned to needs with longer-range benefits or where the beneficial effects of such efforts may be largely unknown at this time.

LIST OF PARTICIPANTS

ANDERSON, James J., President
Watermation, Inc.
1404 East 9th Street
Cleveland, OH 44114

ANDREWS, John F., Professor
Environmental Systems Engineering
Clemson University
(present address:
Dept. of Civil Engineering
University of Houston
Houston, TX 77004)

AUSTIN, John H., Department Head
Environmental Systems Engineering
Clemson University
Clemson, SC 29631

BABCOCK, Russell H., Chief Engineer
C. E. Maguire Inc.
60 First Avenue
Waltham, MA 02154

BALLOTTI, Elmer F., Partner
Greeley and Hansen Engineers
222 South Riverside Plaza
Chicago, IL 60606

BARNES, George D.
Assistant Dirctor of Public Works
303 City Hall
Atlanta, GA 30303

BERTHOUEX, Paul Mac, Associate Professor
Civil and Environmental Engineering
University of Wisconsin
Madison, WI 53706

BERTRAM, William H.
Supervisory Sanitary Engineer
Environmental Protection Agency
1860 Lincoln Street
Denver, CO 80203

BISCAN, N. J., Research Specialist
Dow Chemical U.S.A.
A-1127 Building
Freeport, TX 77541

BLAKELY, Christopher P., Market Manager
Water Management
Honeywell, Inc.
1100 Virginia Drive
Ft. Washington, PA 19034

BREIDENBACH, Andrew W., Director
National Environmental Research Center
Environmental Protection Agency
Cincinnati, OH 45268

BRUBAKER, Jay H., Section Leader
Union Carbide Corp.
P. O. Box 8361
South Charleston, WV 25303

BRYANT, James O.
Municipal Operations Branch
Environmental Protection Agency
Springfield, VA 22153

BUHR, Heinrich O.
Visiting Associate Professor
Environmental Systems Engineering
Clemson University
(on leave from:
Dept. of Chemical Engineering
University of Cape Town
Rondebosch, CP 7700
Republic of South Africa)

CARKEEK, John G., Associate
Consoer Townsend & Associates
360 East Grand Avenue
Chicago, IL 60611

CARROLL, Leo J., Manager
Environmental Division
Fischer & Porter Co.
Warminster, PA 18974

COHEN, Al, President
Astro Ecology Corp.
801 Link Road
League City, TX 77573

CONVERY, John, Director
Advanced Waste Treatment
Research Laboratory
National Environmental Research Center
Environmental Protection Agency
Cincinnati, OH 45268

CROW, Merle
Stevens T. Mason Building
Lansing, MI 48926

DAY, Robert E., Project Manager
Black, Crow & Eidsness, Inc.
Penn Towers–Suite 434
1819 John F. Kennedy Blvd.
Philadelphia, PA 19103

DENIT, Jeffery D., Chief
Impact Analysis Section
Environmental Protection Agency
Washington, DC 20402

DICK, Richard I., Professor
Department of Civil Engineering
University of Delaware
Newark, DE 19711

DOBBINS, William E., President
Teetor-Dobbins, P.C.
515 Johnson Avenue
Bohemia, NY 11716

DOTY, Ronald N.
Supt. Water Quality Control
250 Hamilton Street
Palo Alto, CA 94301

DU CROS, Michael, Marketing Manager
Technicon
Benedict Avenue
Tarrytown, NY 10591

ECKENFELDER, Wesley W., Jr., Professor
Environmental & Resources Engr.
Vanderbilt University
Nashville, TN 37235

ELSAHRAGTY, Mohammed
Quirk, Lawler & Matusky Engineers
415 Route 303
Tappan, NY 10983

FARRELL, J. B., Chief
Ultimate Disposal Section
Advanced Waste Treatment Research Laboratory
National Environmental Research Center
Environmental Protection Agency
Cincinnati, OH 45268

FERTIK, Harry A., Senior Scientist
Leeds & Northrup Company
Technical Center
North Wales, PA 19454

FETCH, John J.
Capital Controls Co.
Div. Dart Ind.
Advance Lane
Colmar, PA 18915

FLANAGAN, Michael J.
Brown & Caldwell Consulting Engineers
66 Mint Street
San Francisco, CA 94103

FREEMAN, Mark P., Senior Scientist
Dorr-Oliver Incorporated
77 Havemeyer Lane
Stamford, CT 06904

GARRISON, Walter E., Assistant Chief Engineer
Sanitation Districts of L. A. County
1955 Workman Mill Road
Whittier, CA 90601

GILBERT, Walter G., Chief
Municipal Operations Branch
Environmental Protection Agency
Washington, DC 20460

GILMAN, Harold D.
Greeley and Hansen Engineers
Six Penn Center Plaza
Philadelphia, PA 19103

GLENN, Don
Space Division
General Electric Company
P. O. Box 8555
Philadelphia, PA 19101

GRAEF, Stephen P.,
Principal Sanitary Engineer
Metropolitan Sanitary District of
Greater Chicago
100 East Erie
Chicago, IL 60611

GUARINO, Carmen F., Commissioner
Philadelphia Water Department
1160 Municipal Services Building
Philadelphia, PA 19107

GULEVICH, Wladimir, Chief
Water Quality Engineering Division
U. S. Army Environmental Hygiene Agency
Aberdeen Proving Ground, MD 21010

HAYES, Charles H.
Assistant General Manager
Gulf Coast Waste Disposal Authority
910 Bay Area Blvd.
Houston, TX 77058

HUMPHREY, Marshall F.
Jet Propulsion Laboratory
4800 Oak Grove Drive
Pasadena, CA 91103

JACOBSON, Kenneth J.
Dept. of Chemical Engineering
University of Pennsylvania
Philadelphia, PA 19104

JOYCE, R. J., Production Manager
Dohrmann-Envirotech
3240 Scott Blvd.
Santa Clara, CA 95050

KEINATH, Thomas M., Associate Professor
Environmental Systems Engineering
Clemson University
Clemson, SC 29631

KEPPLER, Richard R.
Research and Monitoring
Environmental Protection Agency
Boston, MA 02203

KEY, Phil
FMC Corporation
Denver, CO 80210

KUGELMAN, Irwin J., Chief
Pilot Plant Field Investigation Program
National Environmental Research Center
Environmental Protection Agency
Cincinnati, OH 45268

KURLAND, Paul
Delta Scientific Corporation
1172 Route 109
Lindenhurst, NY 11757

LAGER, John A., Vice President
Metcalf & Eddy, Inc.
1029 Corporation Way
Palo Alto, CA 94303

LEISER, Curtis P.
Manager of Computer Services
Seattle Metro
410 West Harrison Street
Seattle, WA 98119

LEJEUNE, T., Manager
R. M. Clayton WPC Plant
2240 Bolton Road, NW
Atlanta, GA 30318

LOMASNEY, Edmond P.
R & D Program Director
Environmental Protection Agency
1421 Peachtree Street, NE
Atlanta, GA 30309

MANKES, Bob
Vice President, Sales
Delta Scientific Corporation
1172 Rt. 109
Lindenhurst, NY 11757

MASTERS, Hugh E.
Storm & Combined Sewer Section
Environmental Protection Agency
Woodbridge Avenue
Edison, NJ 08817

MATHEWS, Michael B.
Sanitation Superintendent
City of Ventura
P. O. Box 99
Ventura, CA 93001

MATSON, Jack, Assistant Professor
Civil Engineering Department
University of Houston
Houston, TX 77004

McKNIGHT, M. Dolan, Plant Superintendent
Fort Worth Water Dept.
P. O. Box 870
Fort Worth, TX 76101

MEYER, John M.
Vice President, Marketing
Systems Control, Inc.
1810 Page Mill Road
Palo Alto, CA 94304

MILLER, G. Wake, Project Director
Public Technology, Inc.
1140 Connecticut Ave., NW
Suite 804
Washington, DC 20036

MOLVAR, Allen E.
Environmental R & D Director
Ratheon Company
P. O. Box 360
West Main Road
Portsmouth, RI 02871

MONTAGUE, Albert, Director
Office of Research & Development
Region III
Environmental Protection Agency
6th and Walnut Streets
Philadelphia, PA 19106

MOSS, J. E.
Union Carbide
P. O. Box 8361
South Charleston, WV 25303

MUELLER, James A., Associate Professor
Environmental Engineering & Science Program
Manhattan College
Bronx, NY 10471

NELSON, John K.
Assistant Director Planning Operations
Metro Denver
3100 East 60th Avenue
Commerce City, CO 80022

NORKIS, Charles M., Sanitary Engineer
Philadelphia Water Department
Broad and Arch Streets
Philadelphia, PA 19106

OLSSON, Gustaf, Assistant Professor
Division of Automatic Control
Lund University
Lund 7, Sweden

OPATKEN, Edward
Municipal Pollution Control Division
Environmental Protection Agency
Washington, DC 20402

PALLESEN, Lars
Dept. of Statistics
University of Wisconsin
Madison, WI 53706

PEIL, Kelly M.
CPT/Engineering Branch Chief
USA Med Bioengineering R & D Laboratory
Ft. Detrick
Frederick, MD 21701

PETERSEN, W. Carl
Associate-Instrumentation
Consoer Townsend & Associates
360 Grand Avenue
Chicago, IL 60611

POLTA, Robert C., Research Engineer
Metropolitan Sewer Board
350 Metro Square Building
7th and Robert Streets
St. Paul, MN 55101

QUIGLEY, John
Assistant Professor of Engineering
University of Wisconsin
Madison, WI 53706

RADEMACHER, John
Department of Natural Resources
State of Maryland
Annapolis, MD 21401

RICHARD, Dan
Technology Applications Programs
NASA Headquarters
Washington, DC 20007

RISLEY, Clifford
Region V
Environmental Protection Agency
Chicago, IL 60606

ROESLER, Joseph F.
Advanced Waste Treatment Research Laboratory
National Environmental Research Center
Environmental Protection Agency
Cincinnati, OH 45268

ROSENKRANZ, William, A., Director
Municipal Pollution Control Division
Environmental Protection Agency
Washington, DC 20460

ROTH, John A., Chairman
Division of Chemical, Fluid and
Thermal Sciences
Vanderbilt University
Nashville, TN 37235

RYCKMAN, D. W., President
Ryckman, Edgerley, Tomlinson & Associates
12161 Lackland Road
St. Louis, MO 63141

RYDER, Robert A., Vice President
Kennedy Engineers, Inc.
657 Howard Street
San Francisco, CA 94105

SAKO, Frank F., Staff Engineer
FMC Corporation
1185 Coleman Avenue
Santa Clara, CA 95052

SALLOUM, J. Duane, Director
Wastewater Technology Centre
Environment Canada
Ottawa, Ontario KIA OH3
CANADA

SCHAFER, Lawrence A.
Principal Engineer
C. E. Maguire, Inc.
60 First Avenue
Waltham, MA 02154

SCHUK, Walter W.
Pilot Plant
Environmental Protection Agency
5000 Overlook Avenue
Washington, DC 20032

SMITH, John M., Chief
Municipal Treatment and Reuse
National Environmental Research Center
Environmental Protection Agency
Cincinnati, OH 45268

SMITH, Wayne
Process Control Branch
National Field Investigations Center
Environmental Protection Agency
Denver, CO 80225

SORENSEN, Poul Erik, Chemical Engineer
Water Quality Research Institute
Academy of Technical Sciences
Soborg, Denmark

STAMBERG, J.
Office of Research & Monitoring
Environmental Protection Agency
Washington, DC 20460

STENSTROM, Michael K.
Environmental Systems Engineering
Clemson University
Clemson, SC 29631

STEPHENS, Ed, Associate
Clinton Bogert Associates
2125 Center Avenue
Fort Lee, NJ 07024

SWEENEY, Robert F.
Associate Professor
Dept. of Chemical Engineering
Villanova University
Villanova, PA 19085

TAYLOR, Reuben
Water & Wastewater Systems
Urban Systems Project Office
NASA, Johnson Space Center
Houston, TX 77058

TOBIN, Patrick
Municipal Pollution Control Division
Environmental Protection Agency
Washington, DC 20460

TOMCZYK, Harry
Senior Electrical Engineer
Metropolitan Sanitary District of Chicago
100 East Erie
Chicago, IL 60611

TORNO, Harry
Office of Research & Monitoring
Environmental Protection Agency
Washington, DC 20460

TRAX, John
Office of Water Programs
Environmental Protection Agency
Washington, DC 20460

TREUPEL, Hans W.
Senior Physicist
IBM Corporation
18100 Frederick Pike
Gaithersburg, MD 20760

WEST, A. W.
Office of Enforcement and General Counsel
National Field Investigations Center
Environmental Protection Agency
Cincinnati, OH 45268

WILKINS, Judd R., Microbiologist
NASA
Langley Research Center
Hampton, VA 23665

WISE, Robert H., Research Chemist
National Environmental Research Center
Environmental Protection Agency
Cincinnati, OH 45268

WOODRUFF, Paul H., President
Roy F. Weston, Inc.
Weston Way
West Chester, PA 19380

WRIGHT, Darwin R.
Municipal Pollution Control Division
Environmental Protection Agency
Washington, DC 20460

YOUNG, Peter C.
Centre for Resource and Environmental Studies
Australian National University
Canberra, Australia

ZICKEFOOSE, Charles S.
Operation Consultant
Stevens Thompson & Runyan, Inc.
5505 S. E. Milwaukie
Portland, OR 97202